THEORETICAL AND EXPERIMENTAL STUDY OF THE EFFECT OF TEMPERATURE, HUMIDITY AND DENSITY ON THE DRYING PROCESS OF COTTON RAW MATERIAL

Nutfillayev Oybek Odil ugli
Researcher, Bukhara state technical university

Received: 18.10.2025
Revised: 19.10.2025
Accepted: 20.10.2025

Keywords:
cotton raw material, fiber, the process of drying, heat, temperature, speed, acceleration, compression, centrifugal force.

Abstract. In this article, the results of the research on the analysis of the effect of moisture and heat on the properties of cotton pulp and ginning parameters through experimental methods are presented. When the air flow temperature is 500 C, 600 C, 700 C, it is determined that the density of cotton cotton raw material and the relative speed of air are related to the coefficient of moisture output.

In world practice, the leading position is occupied by the use of new techniques and technologies for drying raw cotton, which positively affect the quality of products produced during the primary processing of cotton. According to world statistics and the “International Cotton Advisory Committee (ICAC), as a result of a 2% reduction in the area of cotton sowing in the world market, the demand for their products increases to 33.4 million tons”. In developed countries, including the USA, China, Brazil, Australia and India, special attention is paid to the development and improvement of highly efficient cotton processing machines. Today, the dynamic and sustainable development of the cotton-cleaning industry, the introduction of modern equipment at the enterprises of the industry, increasing the efficiency and rational use of production capacities, the production and improvement of highly efficient technological machines of the industry, as well as resource-saving technologies is one of the urgent tasks [1-2].

As we know, depending on the state of moisture in the material and the possibility of its elimination, free and hygroscopic, as well as excess and balanced moisture is allocated. Free humidity is determined by the popular formula.

$$U_{сб}=U-U_{г}$$

Here;

$U_{г}$– the maximum hygroscopic moisture content of the material;

U-the total moisture content of the material.

Wet material can release moisture and vaporize it to the environment under certain conditions, but it can also absorb the surrounding moisture. When drying cotton wool, excess moisture is absorbed, consisting mainly of free and hygroscopic moisture. Studies have shown that excess moisture leads to a loss of fiber quality and a decrease in machine productivity, while low humidity can lead to fiber breakage and difficult to work, because the moisture content from cotton cotton raw material depends very much on the air speed. It is known that moisture, like many other vapor and liquid mixtures, is transferred to an area with a lower vapor potential than an area with a higher vapor (or concentration). The speed of grazing depends on the gradient and flow resistance between the two areas. This gradient can be increased by increasing the temperature and removing stagnant air in the layer. In most cases, in order to increase the humidity in the cotton cleaning enterprises, high-speed is used when drying cotton cotton raw material. But this does not always give a positive result, since the density of the cotton under drying is high [3-5]. The purpose of this study was to determine the relative velocity of the drying agent and the effect of the density of cotton paste on moisture loss and desorption (drying) rate at a given temperature. Depending on the form of the shape inside the device, we determine the consumption of hot air flow passing through its circumference by 50-120 cm^3/s^{-1}. Depending on the sample holder used, the relative speed of air through the pipe varied from 0,05-0,6 m/s. Figure 1 shows the laboratory instrument for determining the effect of sample density on moisture separation process. The device consists of two cameras: the top and bottom, air intake pipe 1, the wire holding the sample 2, the wet cotton basket 3 and the spent air outlet pipe 6, the injection weight 4 and the needle valve 5.

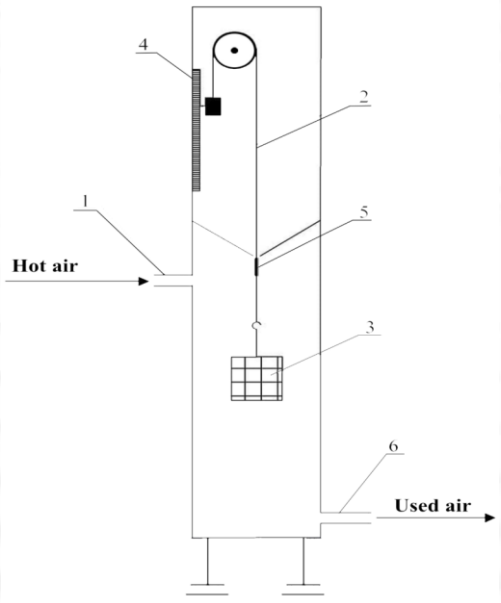

Fig. 1. Laboratory installation for determination of moisture sampling

1-hot air supply pipe, 2- sample support device, 3-wet cotton basket, 4-counterweight, 5-needle valve, 6-exhaust humidity

The unit consists of 2 chambers: upper and lower, which has an air intake pipe 1, a wire to support the sample 2, a basket for wet raw cotton 3 and an outlet pipe 6 for exhaust air, a counterweight 4 and a needle valve. Hot air enters the upper part of the chamber and passes around the sample before being released into the atmosphere. The measurement of the hot air flow is measured and monitored using the AM-50 anemometer, which has a measuring range from 0.1 to 15 m/s and measures with an accuracy of 0.03 m/s. During the study, we will determine the temperature change of hot air to 50^0 S, 60^0 S, 70^0S. Additional studies were carried out on newly created laboratory equipment in order to study the effect of the density of cotton paste on the process of moisture separation (Figure 2). Here it is important to determine at what density the degree of separation of moisture from cotton pulp is limited.

As a result of diffusion process in the samples obtained, moisture of cotton was observed to approach equilibrium [6-8]. The equation of the course of the diffusion process in cotton Poppy can be written in the following curvature in the form of a three-dimensional equation.

$$\frac{\partial c}{d\theta} = k\frac{\partial^2 c}{\partial x^2} + \frac{\partial^2 c}{\partial y^2}\frac{\partial^2 c}{\partial z^2}$$

here,

c -water vapor concentration

θ-time

k - diffusion coefficient

x, y, and z are Deckard coordinates.

These equations can be simplified by using New ton's equation for gases.

$$\frac{M - M_E}{M_0 - M_E} = \beta\left[\frac{1}{\alpha}e^{-\alpha D\theta} + \frac{1}{\gamma}e^{-\gamma D\theta} + \frac{1}{-\eta}e^{-\eta D\theta}\right]$$

Where from

M-moisture content of raw cotton

M_0- initial moisture content of raw cotton

M_E-intermediate moisture content of raw cotton (at equilibrium)

β - 6/π; 8/π for spherical and 4 for flat and cylindrical (for calculations 0,7346, 0,8687 and 4,564 were accepted)

α-1 and 5, 78,31 for spherical and flat and cylindrical

D- the diffusion coefficient, min^{-1}

γ-the coefficient that takes into account the air density (for calculations 4,9 and 30,4 are accepted)

η =9,25 and 74,89 for flat and cylindrical

Before conducting experiments we determine the scale of the separation of moisture by the percentage scale and the scale of the measurement scale. The conducted studies will be useful as a basis for the development of new equipment for the titration and spacing of cotton poppy. Here it is important to know the density of cotton wool and the speed of the drying agent and the effect of the temperature on the rate of moisture loss. The results obtained were analyzed to obtain a single exponent function using mathematical programming, taking into account the multiplicity of the results. Using the equation and analyzing several existing models, we select the modified version of the function .

$$D = T^{A}[c + \delta\ (1 - e^{bv})(e^{-k\rho})]$$

here;

T-temperature, 0S

V-relative velocity

ρ-density

A-regression coefficient

The value of the D-coefficient was found for the rectangular and spherical environment using the SYSNLIN program.

As expected, the degree of moisture separation from the Cotton was determined by the increase in temperature and relative speed and the increase in the carpet associated with a decrease in density [9-10].

Thus, the results showed that the relative speed of the drying agent varied from 0,2 to 0,6 m/s, significantly affecting the rate of moisture separation, as expected at different temperatures of the drying agent. The increase in the relative speed of the drying agent led to an increase in the transfer rate of moisture. During the laboratory analysis, no visible structural changes were observed in the composition of cotton wool and fibers, which were exposed to hot air.

Taking into account the effectiveness and energy efficiency of this proposed laboratory device, it should be noted that the legislation on the change in the moisture content of cotton paste at different values of this hot air velocity has been adopted. The effect of moisture separation coefficient variation on the density of cotton raw material and relative velocity of air in different character of airflow was studied, and moisture separation process high in cotton raw material with density value of 0.5 g/cm^3 was determined [11].

Conclusion. Thus, the results were obtained at the relative speed of the drying agent varying from 0,2 to 0,6 m/s for the agent. As expected, the temperature had a pronounced effect on the moisture content of raw cotton at different temperatures of

the drying agent. An increase in the relative speed of the drying agent resulted in an increase in the rate of moisture transfer. However, cotton seeds and fibers exposed to hot air showed no visible changes in structural properties. Thus, the relative speed and temperature of the drying agent has a significant impact on the moisture content of cotton and the quality of the fiber, that is, its effect on the cleaning and ginning process, which should be further studied.

REFERENCES

1. Rakhmonov Kh., Fayziev S., Rakhimov Kh., Kazakova D. Relative speed and temperature effect investigation of the of the drying agent on the moisture content of cotton // E3S Web of Conferences 264, 04008 (2021) CONMECHYDRO-2021. P. 1-7 https://doi.org/10.1051/e3sconf/202126404008

2. Gary L., Barker J., Weldon L., Mathew G., Pelletier G., Holt A. Relative Velocity, Density, and Temperature Effects on Cotton Moisture Transfer Rates // The Journal of Cotton Science. №5. P. 243-251 (2001).

3. Fayziyev S.Kh., Rakhmonov Kh.K. Study of effect of speed and temperature of the drying agent in the feeder-loosened of new design on the quality of fiber // International journal of emerging trends in engineering research, 8(10), October 2020, P. 7008-7013.

4. Fayziev S.Kh. “Improvement of resource-saving technology of raw cotton feeding system for drying drum”. candidate of technical sciences. diss. Bukhara. 2021.

5. Fayziyev S.Kh., Rakhmonov Kh.K., Rakhimov Kh.K., Mukhtarova Z.N. Improving the transfer network of raw cotton to the drying drum. // International journal of advanced research in science, engineering and technology. ISSN: 2350-0328. Vol. 7, Issue 11 , November 2020. P. 15578-15583.