N.G.Kuliyeva, R.R.Ibragimov, F.S.Qo'ldosheva

RESEARCH OF PROCESS CONTROL METHODS USING MICROCONTROLLERS

(on the example of oil refining)



MINISTRY OF HIGHER EDUCATION,
SCIENCE AND INNOVATIONS
OF THE REPUBLIC OF UZBEKISTAN

BUKHARA ENGINEERING-TECHNOLOGICAL
INSTITUTE

N.G. Kuliyeva, R.R. Ibragimov,
F.S. Qo'ldosheva.

RESEARCH OF PROCESS CONTROL METHODS USING MICROCONTROLLERS

(on the example of oil refining)

monograph

Bukhara - 2024

UDC 681.5.01:004
LBC 32.965
K 81

Kuliyeva N.G., Ibragimov R.R., Qo'ldosheva F.S.
Research of process control methods using microcontrollers (on the example of oil refining). [Text]: monograph / N.G. Kuliyeva, R.R. Ibragimov, F.S. Qo'ldosheva. – Bukhara: p.h. "Bukhara Brilliant Cargo" 2024, – 100 p.

Annotation

The monograph examines the state of automatic control of primary oil refining processes and, on the basis of a comprehensive analysis, defines the goal and objectives of the study. A rectification column was taken as the object of research.

A review of the main types of industrial installations for primary oil refining, which, first of all, include installations for atmospheric, vacuum and atmospheric-vacuum tubulars, is carried out. The principle of operation of executive mechanisms, converters and intelligent sensors is considered. The main attention is paid to the use of microcontroller technology in primary oil refining.

Reviewers:

Sh.R. Ubaydullaeva — *Associate Professor of the Bukhara branch of the Tashkent Institute of Irrigation and Agricultural Mechanization Engineers, candidate of technical sciences*

M.I. Makhmudov — *Head of the Department of the Bukhara Engineering and Technological Institute, Doctor of Technical Sciences.*

This monograph was discussed at the 7th meeting of Bukhara Engineering Technological Institute on 04.01.2024 and approved for publication.

ISBN 978-9910-9395-6-3

© Kuliyeva N.G. 2024.
© p.h. "B.B.C", 2024.

MINISTRY OF HIGHER AND SECONDARY SPECIAL EDUCATION OF THE REPUBLIC OF UZBEKISTAN

BUKHARA ENGINEERING AND TECHNOLOGICAL INSTITUTE

UDC
551.521.3.

N. G. Kulieva, R.R.Ibragimov, F.S.Kuldosheva

RESEARCH OF PROCESS CONTROL METHODS USING MICROCONTROLLERS
(on the example of oil refining)

BUKHARA -2020

UDC 551.521.3

Kulieva Nodira Gulamrizoevna, Ibragimov Ravshan Rustamovich, Kuldosheva Firuza Salimovna.

Research of process control methods using microcontrollers (on the example of oil refining). Monograph.

The monograph examines the state of automatic control of primary oil refining processes and, on the basis of a comprehensive analysis, defines the goal and objectives of the study. A rectification column was taken as the object of research.

A review of the main types of industrial installations for primary oil refining, which, first of all, include installations for atmospheric, vacuum and atmospheric-vacuum tubulars, is carried out. The principle of operation of executive mechanisms, converters and intelligent sensors is considered. The main attention is paid to the use of microcontroller technology in primary oil refining.

Reviewers:

Sh.R. Ubaydullaeva

Associate Professor of the Bukhara branch of the Tashkent Institute of Irrigation and Agricultural Mechanization Engineers, candidate of technical sciences;

M.I.Makhmudov

Head of the Department of the Bukhara Engineering and Technological Institute, Doctor of Technical Sciences.

Recommended in the open press of the Scientific Council of the Bukhara Engineering and Technological Institute (Protocol No. 7, 04.24. 2020)

TABLE OF CONTENTS

Introduction……..		
I.	General concept of refining the oil and gas industry **……...**	
1.1.	Development of the oil and gas industry in Uzbekistan **……..**	
1.2.	Stages of oil refining **…….**	
1.3.	Primary oil refining **…….**	
1.4.	Secondary oil refining **…….**	
II.	**Hardware and Process Programming Tool …….**	
2.1.	Controlling the process of primary distillation of oil using SCADA software **……**	
2.2.	Technical characteristics of the controller OVEN TRM-138 **……**	
2.3.	Instruments for measuring physical parameters (pressure, temperature, flow rate, level, etc.) **……..**	
III.	Research and adjustment of the control loop **…….**	
3.1.	Functional diagram of the control loop **……..**	
3.2.	Description of elements by transfer functions. Block diagram of the control loop **……..**	
3.3.	Investigation of the control loop in the MATLAB system **……**	
IV.	**Software and mathematical support …….**	
4.1.	Development of control algorithms **……..**	
4.2.	Software. Project structure **……...**	
4.3.	Review of existing SCADA systems **……..**	
4.4.	Analysis and selection of the operator interface development environment. Description of the graphical operator interface **……**	
Conclusions ……		
List of used literature ……		

INTRODUCTION

Automation of various types of production is an important area of scientific and technological development of society. Automation leads to an increase in labor productivity, the elimination of a person from the production process, to an increase in the quality of the process and to a fuller satisfaction of the needs of society.

An automatic control system (ACS) for the atmospheric distillation of oil will increase the volume of primary distillation of oil, improve the technology of oil refining, introduce new technological processes, effective catalysts, and advanced equipment. The introduction of automation will make it possible to reduce scrap and production waste, reduce the cost of raw materials and energy, reduce the number of key workers, and ensure deep oil refining.

Microprocessor technology (MP) is experiencing a period of rapid development, new sets of microprocessor circuits appear, hardware and software are developing, devices for debugging microprocessor control devices are being developed. Control devices created on the basis of MF are increasingly used in industry, transport, and power engineering. And, finally, the MP is a powerful device for information processing and its capabilities are very large, but not all tasks that can be implemented on the basis of a microcomputer need such a solution: modern microelectronics has an extremely diverse set of integrated circuits (ICs), including including a high level of integration, which allows you to solve very complex problems. Therefore, the choice of a control device solution based on a programmable automaton or an automaton with rigid logic should be carried out on the basis of a technical and economic comparison of options. Microprocessor technology is used in measuring instruments for measuring electrical and non-electrical quantities both with the aim of expanding the functions of devices, giving them new properties, converting them into system complexes, and with the aim of improving the characteristics of individual units and the device as a whole.

Microprocessor technology can be widely used not only in control systems, but also in the creation of various measuring transducers. Replacing analog signal processing methods with digital ones significantly increases the measurement accuracy and expands the functionality of the measuring instrument. Indeed, replacing the analog integration operation, which is the most unpleasant from the point of view of signal processing accuracy, with a digital one increases the measurement accuracy several times, since the analog-to-digital conversion (ADC) is only determined by the accuracy of the operation.

I. GENERAL CONCEPT OF REFINING OF THE OIL AND GAS INDUSTRY

1.1. Development of the oil and gas industry in Uzbekistan

The development of the oil and gas industry in Uzbekistan is inextricably linked with the fulfillment of tasks to ensure the efficient functioning of the fuel and energy complex of the republic. The oil and gas sector of the economy of Uzbekistan is now one of the key areas of economic development. In this regard, when the country now faces the most important task of ensuring annual GDP growth rates of at least 8% per year for a long period, the sustainable development of the oil and gas industry in Uzbekistan is of great importance. We strive to restructure the line of business of enterprises in such a way that at the forefront is not an increase in the export of such strategic raw materials as natural gas, but the development of our own production for its processing and the production of highly liquid oil and gas and chemical products with high added value that meet international quality and environmental requirements.

Ensuring sustainable development of enterprises in the oil and gas industry requires a clear definition of priority areas of activity. The implementation of these directions of development of the oil and gas industry requires appropriate financial resources to attract modern technologies for the search for hydrocarbon raw materials. The republic pays special attention to attracting foreign investors. Among the most significant are investment projects implemented jointly with foreign companies: Gazprom and Lukoil (Russia), CNODC (PRC), Petrovietnam (Vietnam), KNOC (Korea), SASOL (South Africa), the Consortium of companies for the Aral project, etc.

The investment attractiveness of the industry is growing, its investment activity is intensifying. This is characterized by an increase in the share of attracting and utilizing foreign capital in the development and modernization of the oil and gas sector of the economy in the volume of investments. The volume of direct foreign investments in comparison with 2005 increased almost 23 times.

Prospects for the development of gas processing are associated both with the expansion of the production of liquefied gas, condensate, sulfur, and with the in-depth use of all natural gas resources for chemical synthesis to obtain highly liquid products.

At present, the Uzbekneftegaz system for processing natural gas operates: Mubarek GPP, Shurtan Gas Chemical Complex and UDP Shurtanneftegaz.

The capacity of five stages of the propane-butane mixture production unit for liquefied gas at the UDU "Shurtanneftegaz" is 250.0 thousand tons per year, for condensate - about 100 thousand tons per year, condensate stabilization is 500 thousand tons per year and sulfur production - up to 5.0 thousand tons per year, which ensures the processing of the entire volume of acid gas from amine desulfurization units into sulfur.

In 2012 - 2013, at the Mubarek GPP UDP, 3 lines for the production of liquefied hydrocarbon gas with a unit capacity of 4.0 billion cubic meters of gas per year were put into operation. The total production of liquefied petroleum gas at the enterprise is about 240 thousand tons and 110 thousand tons of stable condensate.

Deeper extraction of valuable components from natural gas is associated with the commissioning of the Shurtan Gas Chemical Complex in 2001, where for the first time cryogenic technology for processing natural gas was applied, which separates ethane, propane, butane and gas condensate. The complex includes ethylene production based on released ethane and polyethylene production. With the aim of stable supply of raw gas to the "GTL Project", work is currently being carried out "Modernization of the Shurtan Head Facilities (HS) facilities with the construction of the Shurtan-ShGKhK gas pipeline." Organizational and technical measures are being developed for the reconstruction and modernization of the existing installations of GS Shurtan, the calculation of production by enterprises and an approximate cost estimate are made. The implementation of measures for the technical re-equipment of the Shurtan GS by supplying purified gas from the UPPBS to the Shurtan Gas Chemical Complex will

increase the production of ethylene to 152.0 thousand tons and polyethylene to 138.0 thousand tons.

Currently, the construction of the Ustyurt Gas Chemical Complex on the basis of the Surgil field is underway with the development of the field, where 4.5 billion cubic meters of gas will be processed per year and up to 400 thousand tons of polyethylene and about 100 thousand tons of polypropylene will be produced. This project was included in the list of ten global investment projects in the world at the end of 2012. Completion of construction and installation work for this facility is scheduled for the end of 2015 and its commissioning - starting in 2016.

In order to increase the production of environmentally friendly petroleum products in the Republic of Uzbekistan, a project is being implemented to create a production of synthetic liquid fuel based on purified methane produced at the Shurtan Gas Chemical Complex. This technology will expand the possibilities of supplying fuel to the growing needs of the country and significantly reduce the impact on the environment of harmful emissions, since products manufactured using the GTL technology do not contain aromatic hydrocarbons, sulfur, nitrogen and meet Euro-4 requirements.

Together with Lukoil, work is underway to develop the Kandym field with the construction of a gas processing plant. The design capacity of the facility for processed gas is 8.1 billion m3 per year. At the GPP, it is envisaged to process high-sulfur gas at two strings with a nominal capacity of 4.05 billion m3 per year to produce 7.6 billion m3 of purified dried gas per year; stable condensate 209.0 thousand tons; gas sulfur 270.0 thousand tons.

In accordance with the Decree of the President of the Republic of Uzbekistan dated March 4, 2015 No. UP-4707, the program of measures to ensure structural transformations, modernization and diversification of production for 2015-2019 includes large projects aimed at deeper processing of hydrocarbons, including:

• Organization of production of aromatic hydrocarbons (benzene, toluene, xylene) from pyrolysis distillate, the production of which is planned at the Ustyurt Gas Chemical Complex. Project implementation period: 2016-2020.

• "Construction of a new plant for pyrolysis of hydrocarbons" (pyrolysis distillate JV "Uz-Kor Gas Chemical");

• “Compensation for retired capacities of the sulfur recovery unit at UDP“ Mubarek GPP ”, etc.

• "Organization of the production of olefins from natural gas with the production of polymers" (polyethylene, polypropylene, polystyrene, rubber, spandex, etc.);

• Organization of production of polyethylene, polypropylene, ethylene glycols, ethylene oxides and ethylene propylene rubber based on the processing of natural gas into methanol and the production of olefins (ethylene and propylene) from methanol by the MTO process. Project implementation period: 2015-2019.

In 2016, it is planned to commission facilities within 11 projects, in 2017 - 5 projects, in 2018 - 9 projects, in 2019 - 14 projects and 11 projects after 2019.

The program for the localization of production of finished products, components and materials for 2015-2019 "which provides for an annual increase in the production of previously imported products and the expansion of inter-industry industrial cooperation - from 14.7% in 2015 to 35.5% in 2019.

The Program includes 32 projects that provide for the organization of the production of competitive import-substituting products. Their implementation will increase the volume of production of localized products in the industry as a whole from 87.793 billion soums in 2015 to 1,042.022 billion soums.

The planned effect of import substitution will amount to more than $ 200.0 million. USA, and more than 1,300 new jobs will be created. At the same time, the production of new types of engineering products, chemical reagents and weighting agents for drilling

fluids, insulating materials, modern gas meters, oil and gas processing products, including polypropylene, will be mastered, the production of which is planned at the Ustyurt Gas Chemical Complex starting in 2016.

Over these years, the export of localized products will grow from 20.0 thousand US dollars to 498 million 75 thousand US dollars.

Energy and resource conservation, which are considered as one of the main priorities for the effective development of the country's economy in general and the oil and gas industry in particular.

Within the framework of the Program in the field of optimization of electricity consumption, energy saving and the use of alternative energy sources, it is planned to implement 11 projects totaling $ 96.5 million. When implementing these projects, according to preliminary estimates at oil and gas facilities, it is expected to save about 76.4 million kW of electricity and 100 thousand Gcal of thermal energy, as well as the generation of 3.9 million kW of electricity for own needs.

Solving environmental issues in the oil and gas industry. This problem is multifaceted and many aspects, includes many directions, and therefore is usually interpreted as the transfer of the oil and gas industry to the mode of functioning of the "green economy".

The oil and gas industry considers the development of oil and gas machine-building on the basis of the created machine-building complex of the industry. It currently includes: JSC "Uzbekkhimmash Plant" - the parent company specializing in the design, manufacture and maintenance of equipment for oil and gas chemical, oilfield and other industries; JSC "Andijan Experimental Plant", engaged in the manufacture of spare parts for drilling equipment, including rubber products; JSC "Kokand Mechanical Plant", specializing in the manufacture of oil and gas processing equipment and spare parts for them; JSC "Bukhara Mechanical Repair Plant", which manufactures oil and gas, drilling

equipment and spare parts for gas pumping units. Management of the machine-building complex of the oil and gas industry is carried out by JSC "Uzneftegazmash".

The largest hydrocarbon fields of the Republic, such as: Vostochny Berdakh, Dayakhatyn, Surgil, Kulbeshkak and many others, including the production of block equipment for gas treatment units, low-temperature separation units, Ustyurtgaz UDP, units gas dehydration at the Kungrad compressor station of the JSC "Uztransgaz". For the first time in Uzbekistan, the Uzbekkhimmash Plant JSC mastered the production of air cooling devices (AVO) - horizontal, zigzag, low-flow, which were used in the modernization of the Kellogg compressor station at the Kokdumalak field, and also manufactured and supplied equipment for a propane-butane mixture production unit UPBS for UDP "Shurtanneftegaz". It is planned to modernize the production facilities of the JSC "Uzbekkhimmash Plant", which will allow starting the production of thick-walled, large-sized and heavy equipment, which until now were purchased by the industry's enterprises abroad.

The industry stems from the global problem of our time - the building of an information society. This process will undoubtedly affect all aspects of the development of the oil and gas industry and, in this regard, will require the integrated implementation of information technologies in the management and technological processes of the industry. Therefore, the primary task in this process is the widespread introduction of modern information technologies at the enterprises of the industry.

Improving the economic mechanism for the sustainable development of the oil and gas industry and its enterprises, which also seems to be a priority area, since the solution of any technical and technological problem naturally encounters economic problems of costs and benefits. The processes of ensuring financial stability are of decisive importance by introducing a strict economy regime, stimulating the reduction of production costs and production costs.

Industry enterprises. This is the training of highly qualified personnel. It is no secret that effective and fruitful work is always achieved only with an optimal combination of experience, high professionalism and enthusiasm of human resources capable of effectively solving the strategic and tactical tasks of sustainable development of the oil and gas industry in Uzbekistan.

Development of the industry during the years of independence





For the industry, a new life began from the very first days of the sovereignty of the Republic of Uzbekistan. Since that time, a new stage in the development of the oil and gas industry begins. The country's leadership attached particular importance to the comprehensive development of this industry. With the acquisition of independence by Uzbekistan and the beginning of economic reforms in the republic since 1992, special attention is paid to the oil and gas complex. The stages of structural transformation, ensuring the evolutionary transition from command-administrative methods to market mechanisms of functioning, were accompanied by the solution of the following strategic tasks, which were identified in 1992 by the first President of the Republic of Uzbekistan **I.A. Karimov** identified the following main directions for the development of the oil and gas industry:

- a significant increase in oil and gas condensate production in order to achieve oil independence of the republic;

- deepening of technological processes for oil and gas processing in order to bring the quality of products to the level of world standards;

- building up hydrocarbon reserves, primarily liquid ones, through the discovery of new fields to ensure a reliable raw material base for the oil and gas industry in Uzbekistan.

Today, NHC Uzbekneftegaz, employing about 120 thousand people, is a vertically integrated, three-tier holding company that unites more than 200 enterprises that provide all areas of the oil and gas industry.



In 1997, the Bukhara oil refinery was commissioned, built jointly with a consortium of Technip (France), Marubeni, JGC (Japan).



1.2. Stages of oil refining

At present, various types of fuels, petroleum oils, paraffins, bitumens, kerosene, solvents, soot, lubricants and other petroleum products obtained by processing raw materials can be obtained from crude oil.

The extracted hydrocarbon feedstock (oil, associated petroleum gas and natural gas) at the field goes through a long stage before important and valuable components are extracted from this mixture, from which usable oil products will subsequently be obtained.

Oil refining is a very complex technological process that begins with the transportation of oil products to refineries. Here oil goes through several stages before becoming a ready-to-use product:

1.preparation of oil for primary processing

2.primary oil refining (direct distillation)

3.recycling of oil

4. refining of petroleum products

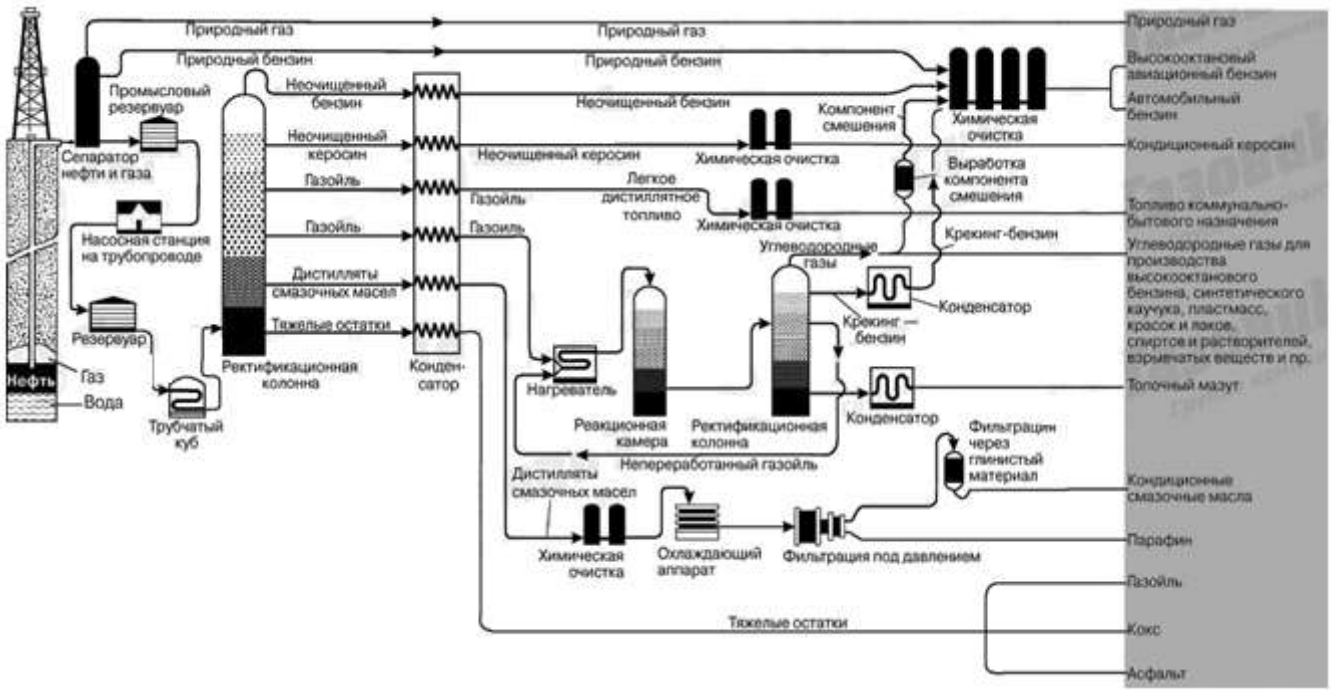

Oil preparation for primary processing

Extracted but not processed oil contains various impurities, for example, salt, water, sand, clay, soil particles, associated gas associated gas. The service life of the field increases the watering of the oil reservoir and, accordingly, the content of water and other impurities in the oil produced. The presence of mechanical impurities and water interferes with the transportation of oil through oil product pipelines for its further processing, causes the formation of deposits in heat exchangers and other containers, complicates the process of oil refining.

All produced oil undergoes a complex refining process, first mechanical, then fine refining.

At this stage, the extracted raw materials are also separated into oil and gas in oil and gas separators.

Standing in sealed containers in the cold or when heated will remove large amounts of water and particulate matter. To obtain high performance of installations for further processing of oil, the latter is subjected to additional dehydration and desalination in special electrical desalting installations.

Often, water and oil form a sparingly soluble emulsion, in which the smallest droplets of one liquid are suspended in another.

There are two types of emulsions:

- hydrophilic emulsion, i.e. oil in water
- hydrophobic emulsion, i.e. water in oil

There are several ways to break down emulsions:

- mechanical
- chemical
- electric

The mechanical method, in turn, is divided into:

• upholding

• centrifugation

The difference in the densities of the components of the emulsion makes it easy to separate water and oil by settling by heating the liquid to 120-1600C under a pressure of 8-15 atmospheres for 2-3 hours. In this case, evaporation of water is not allowed.

The emulsion can also be separated by centrifugal forces in centrifuges at 3500-50,000 rpm.

In the chemical method, the emulsion is destroyed by the use of demulsifiers, i.e. surfactants. Demulsifiers are more active than the active emulsifier, form an emulsion of the opposite type, dissolve the adsorption film. This method is used in conjunction with electrical.

In installations of an electric dehydrator, when the oil emulsion is electrically affected, water particles are combined, and a more rapid separation with oil occurs.

1.3. Primary oil refining

The oil produced is a mixture of naphthenic, paraffinic, aromatic carbohydrates, which have different molecular weights and boiling points, and sulfur, oxygen and nitrogenous organic compounds. Primary oil refining consists in separating the treated oil and gases into fractions and groups of hydrocarbons. Distillation produces a wide range of petroleum products and intermediate products.

The essence of the process is based on the principle of the difference between the boiling points of the components of the produced oil. As a result, the raw material decomposes into fractions - to fuel oil (light oil products) and to tar (oil).

Primary distillation of oil can be carried out with:

• single evaporation

• multiple evaporation

• gradual evaporation

With flash evaporation, the oil is heated in a pre-heater to a predetermined temperature. Vapors are formed as it heats up. When the set temperature is reached, the vapor-liquid mixture enters the evaporator (cylinder in which the vapor is separated from the liquid phase).

The flash process is a sequence of flashings with a gradual increase in heating temperature.

Gradual distillation is the small change in the state of the oil with each flash.

The main apparatuses in which oil distillation, or distillation, takes place, are tube furnaces, rectification columns and heat exchangers.

Depending on the type of distillation, tube furnaces are divided into atmospheric furnaces AT, vacuum furnaces BT and atmospheric vacuum tube furnaces AVT. In AT units, shallow processing is carried out and gasoline, kerosene, diesel fractions and fuel oil are obtained. In VT units, deep processing of raw materials is carried out and gas oil and oil fractions, tar are obtained, which are subsequently used for the production of lubricating oils, coke, bitumen, etc. In AVT furnaces, two methods of oil distillation are combined.

The process of oil refining by the principle of evaporation takes place in distillation columns. There, the initial oil is pumped into a heat exchanger, heated, and then fed into a tubular furnace (fired heater), where it is heated to a predetermined temperature. Further, oil in the form of a vapor-liquid mixture enters the evaporation part of the rectification column. Here the separation of the vapor phase and the liquid phase takes place: the vapor rises up the column, the liquid flows down.

The above methods of oil refining cannot be used to isolate individual high-purity hydrocarbons from oil fractions, which will later become feedstock for the petrochemical industry when producing benzene, toluene, xylene, etc. To obtain high-purity

hydrocarbons, an additional substance is introduced into oil distillation units to increase the difference in the volatility of the separated hydrocarbons.

The resulting components from primary oil refining are usually not used as a finished product. At the stage of primary distillation, the properties and characteristics of oil are determined, on which the choice of the further processing process to obtain the final product depends.

As a result of primary oil processing, the following main oil products are obtained:

• hydrocarbon gas (propane, butane)

• gasoline fraction (boiling point up to 200 degrees)

• kerosene (boiling point 220-275 degrees)

• gas oil or diesel fuel (boiling point 200-400 degrees)

• lubricating oils (boiling point above 300 degrees) residue (fuel oil)

1.4. Secondary oil refining

Depending on the physicochemical properties of oil and on the need for the final product, there is a choice of a further method of destructive processing of raw materials. Secondary oil refining consists in thermal and catalytic action on oil products obtained by the direct distillation method. The impact on the raw materials, that is, the hydrocarbons contained in the oil, change their nature.

The options for oil refining are highlighted:

• fuel

• fuel and oil

• petrochemical

The fuel processing method is used to obtain high-quality motor gasolines, winter and summer diesel fuels, jet fuels, and boiler fuels. This method uses fewer process units. The fuel method is a process that produces motor fuels from heavy petroleum fractions

and residue. This type of processing includes catalytic cracking, catalytic reforming, hydrocracking, hydrotreating and other thermal processes.

Fuel and oil processing produces lubricating oils and asphalt along with fuels. This type includes the processes of extraction and deasphalting.

The greatest variety of petroleum products is obtained as a result of petrochemical processing. In this regard, a large number of technological units are used. As a result of petrochemical processing of raw materials, not only fuels and oils are produced, but also nitrogen fertilizers, synthetic rubber, plastics, synthetic fibers, detergents, fatty acids, phenol, acetone, alcohol, ethers and other chemicals.

Catalytic cracking

Catalytic cracking uses a catalyst to accelerate chemical processes, but at the same time without changing the nature of these chemical reactions. The essence of the cracking process, i.e. the splitting reaction consists in driving oils heated to a vaporous state through a catalyst.

Reforming

The reforming process is mainly used for the production of high-octane gasoline. Only paraffinic fractions boiling in the range of 95-205 ° C can be subjected to this processing.

Reforming types:

• thermal reforming

• catalytic reforming

Thermal reforming exposes the primary refining fractions to only high temperatures.

In catalytic reforming, the initial fractions are exposed to both temperature and catalysts.

Hydrocracking and hydrotreating

This processing method consists in obtaining gasoline fractions, jet and diesel fuel, lubricating oils and liquefied gases due to the effect of hydrogen on high-boiling petroleum fractions under the influence of a catalyst. As a result of hydrocracking, the feed oil fractions are also hydrotreated.

Hydrotreating is the removal of sulfur and other impurities from raw materials. Typically, hydrotreating units are combined with catalytic reforming units, since as a result of the latter, a large amount of hydrogen is released. As a result of cleaning, the quality of oil products increases, and corrosion of equipment decreases.

Extraction and deasphalting

The extraction process consists in separating a mixture of solid or liquid substances using solvents. The extractable components are well soluble in the solvent used. Further, dewaxing is carried out to reduce the pour point of the oil. The final product is obtained by hydrotreating. This processing method is used to obtain diesel fuel and to recover aromatic hydrocarbons.

As a result of deasphalting, tarry-asphaltene substances are obtained from the residual products of oil distillation. Subsequently, deasphalted oil is used for the production of bitumen, it is used as a feedstock for catalytic cracking and hydrocracking.

Coking

To obtain petroleum coke and gas oil fractions from heavy fractions of oil distillation, deasphalting residues, thermal and catalytic cracking, and pyrolysis of gasolines, the coking process is used. This type of refining of petroleum products consists in the sequential course of reactions of cracking, dehydrogenation (release of hydrogen from raw materials), cyclization (formation of a cyclic structure), aromatization (an increase in aromatic hydrocarbons in oil), polycondensation (release of by-products such as water, alcohol) and compaction for the formation of a continuous "coke cake".

Volatile products released during the coking process are subjected to a rectification process in order to obtain the target fractions and stabilize them.

Isomerization

The isomerization process consists in the conversion of its isomers from the feedstock. Such transformations lead to the production of gasolines with a high octane number.

Alkination

By introducing alkyd groups into compounds, high-octane gasolines are obtained from hydrocarbon gases.

It should be noted that in the process of oil refining and to obtain the final product, the entire range of oil and gas and petrochemical technologies is used. The complexity and variety of finished products that can be obtained from the extracted raw materials also determine the variety of oil refining processes.

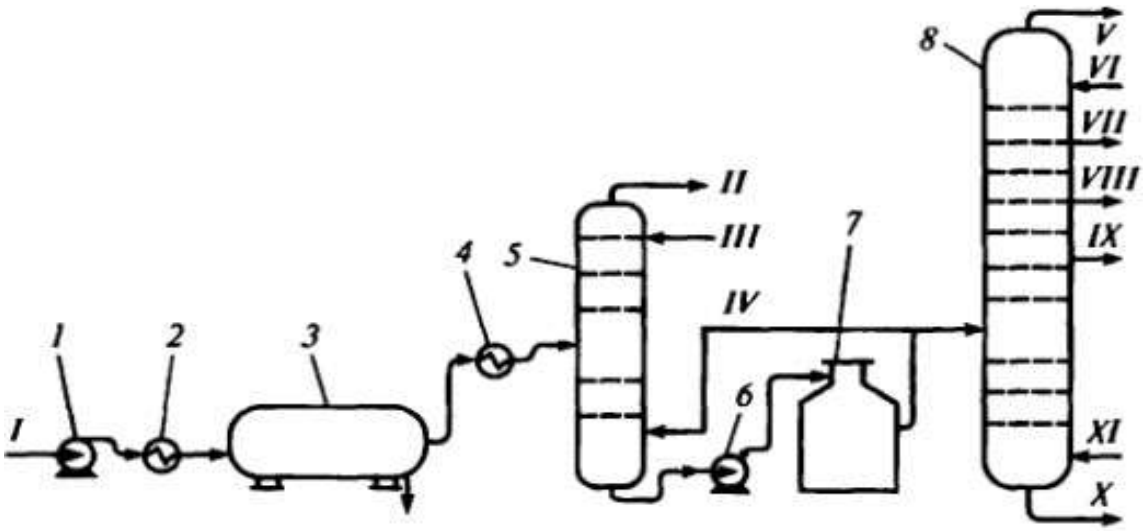

Fig. 1. ***Distillation of oil according to the scheme of double evaporation. Installations operating according to the double evaporation scheme have capacity up to 2 million tons / year.***

1-feed pump; 2-4 heat exchangers; 3-electric dehydrator; 5-first rectification column; 6-pump; 7-oven; 8-main rectification column; I-crude oil; II-mixture of gases and light gasoline; III-acute irrigation; IV-hot stream; V-steam-gas mixture; VI-reflux of the main column with distillate; VII-IX-components of light oil products;

X-fuel oil; XI-water vapor.

At atmospheric pipe installations, shallow distillation of oil is carried out to obtain gasoline, kerosene, diesel fractions and fuel oil. Vacuum tube installations are designed to deepen oil refining. At these units, gas oil, oil fractions and tar are obtained from fuel oil, which are used as feedstock in the secondary oil refining processes.

The distillation process takes place in a distillation column, which is a vertical cylindrical apparatus up to 30 m high and up to 4 m in diameter.The internal space of the column is divided into compartments by a large number of horizontal disks (trays), in which there are holes for oil vapor to pass through them (Fig. 2 .)

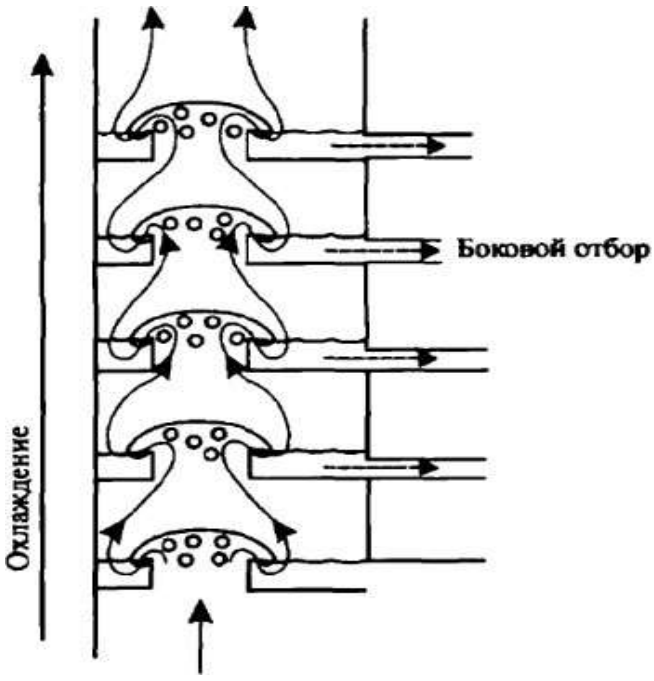

*Fig. 2**. Trays with caps inside the distillation column***

Before pumping into the column, oil is heated in a tubular furnace to a temperature of 360-3900C. In this case, gasoline, naphtha (naphtha), kerosene, light and heavy gas oil pass into a vapor state, and the liquid phase with a higher boiling point is fuel oil. After the hot mixture is introduced into the column, the fuel oil flows downward, and the hydrocarbons in the vapor state rise upward.

A mixture of hot liquid and steam, rising up the column and cooling down, gradually condenses. First, heavy refractory fractions of oil are separated and sink to the bottom of special trays, above, vapors of lighter fractions condense and settle to the bottom of the trays. The peculiarity of the rectification process is that hot vapors, rising, alternately pass through layers of hot condensate. The number of trays in the column should be such that the total flow rate of finished distillation products discharged from them is equal to the flow rate of crude oil supplied to the inside of the column. Non-condensed hydrocarbon vapors are sent to gas fractionation, where dry gas, propane, butane and gasoline fraction are obtained from them.

During the primary distillation of oil, a wide range of fractions and oil products are obtained, differing in terms of boiling points, hydrocarbon and chemical composition, viscosity, flash points, pour point and other properties.

Depending on the technology of oil distillation, the propane-butane fraction is obtained in a liquefied or gaseous state. It is used as a raw material in gas fractionation plants for the production of individual hydrocarbons, household fuel, and a component of motor gasoline.

A fraction is called a petroleum product if its properties meet the standards or technical specifications for a commercial product that does not require additional processing.

The gasoline fraction with a boiling range of 28-180^{0}C is mainly subjected to secondary distillation to obtain narrow fractions (28-62.62-85.85-105^{0}C, etc.). These

fractions serve as raw materials for isomerization processes, catalytic reforming in order to obtain individual aromatic hydrocarbons (benzene, toluene, xylenes), high-octane components of automobile and aviation gasolines, and also as raw materials for pyrolysis in ethylene production.

The kerosene fraction with boiling temperatures of 120-230^{0}C is used as fuel for jet engines; fraction 150-280^{0}C from low-sulfur oils is used as lighting kerosene: fraction 140-200^{0}C - as a solvent for the paint and varnish industry.

The diesel fraction with boiling temperatures of 140-320^{0}C is used as winter diesel fuel, the fraction 180-360^{0}C is used as summer diesel.

Fraction 200-320^{0}C from highly paraffinic oil is used as a raw material for obtaining liquid paraffins.

Fuel oil is used as a boiler fuel or as a feedstock for vacuum distillation units, as well as thermal, catalytic cracking and hydrocracking.

Narrow oil fractions with boiling ranges of 320-400, 350-420, 450-500^{0}C are used as raw materials for the production of mineral oils for various purposes and solid paraffins.

Tar, the residue of vacuum distillation of fuel oil, is subjected to deasphalting, coking, and is used in the production of bitumen.

II. TECHNICAL SUPPLY AND PROCESS TOOL

2.1. Controlling the process of primary distillation of oil using SCADA software

The functional area of the profile of the tools built into the AU covers the management and administration functions related to:

• monitoring the performance and correct functioning of the system as a whole;

• configuration management of application software, version replication;

• managing user access to system resources and resource configuration;

• reconfiguration of applications due to changes in the application functions of the AU;

• customization of user interfaces (generation of screen forms and reports);

• maintaining the database of the system;

• restoration of system performance after failures and accidents.

A single operational control center, equipped with an automated dispatch control system (SCADA-system), should carry out the solution of such tasks as:

• operational monitoring of production and technological processes, carried out in real time;

• receipt and processing of technological, production information and instructions (assignments) from the top (strategic) level of enterprise management;

• operational corrective management of material and energy flows in accordance with changes in the production situation and instructions of the higher level of management;

• optative corrective management of stocks and production resources;

• monitoring and management of production quality;

• control and, if necessary, corrective action on the management of individual (most important) technological installations (work centers);

• predictive analysis of the occurrence of failures, failures and emergencies and the formation of damping corrective controls;

• automated accumulation and storage of production experience in an information warehouse. Having decided on the set of standards that the speaker should satisfy, you can start designing its individual components.

• OPC Security, defining the functions of organizing client access rights to the data of the control system through the OPC server;

Based on these features of the objects of automation in the oil and gas industry, the corresponding requirements are put forward for the structure, as well as the hardware and

software of the nuclear power plant, which is implemented in the form of the following options.

Option 1. Control of continuous technological processes of oil and gas treatment and their transportation, plant processes of oil and gas refining are implemented using distributed AC structures (DCS systems). In such systems, all known automation functions are distributed between different hardware of the control system. Each component of the system is highly specialized and "does its own thing." Management of the technological process as a whole is reduced to a centralized dispatch control of equipment.

Centralized control is implemented by commands *to open*, *close*, *turn on, turn off, stop, start* (discrete control). Control at the field level is reduced to automatic regulation of technological parameters. The functions of monitoring, signaling emergencies, and interlocks are widely developed.

Option 2. Supervisory control is implemented using SCADA systems. The task of such systems is to provide automatic remote monitoring and discrete control of the functions of a large number of distributed devices (often located at a great distance from each other and from the control room). The number of possible devices operating under the control of supervisory control and management systems is large and can reach several hundred. For these systems, the most typical task is the collection and transmission of data, which is implemented by remotely located terminal devices.

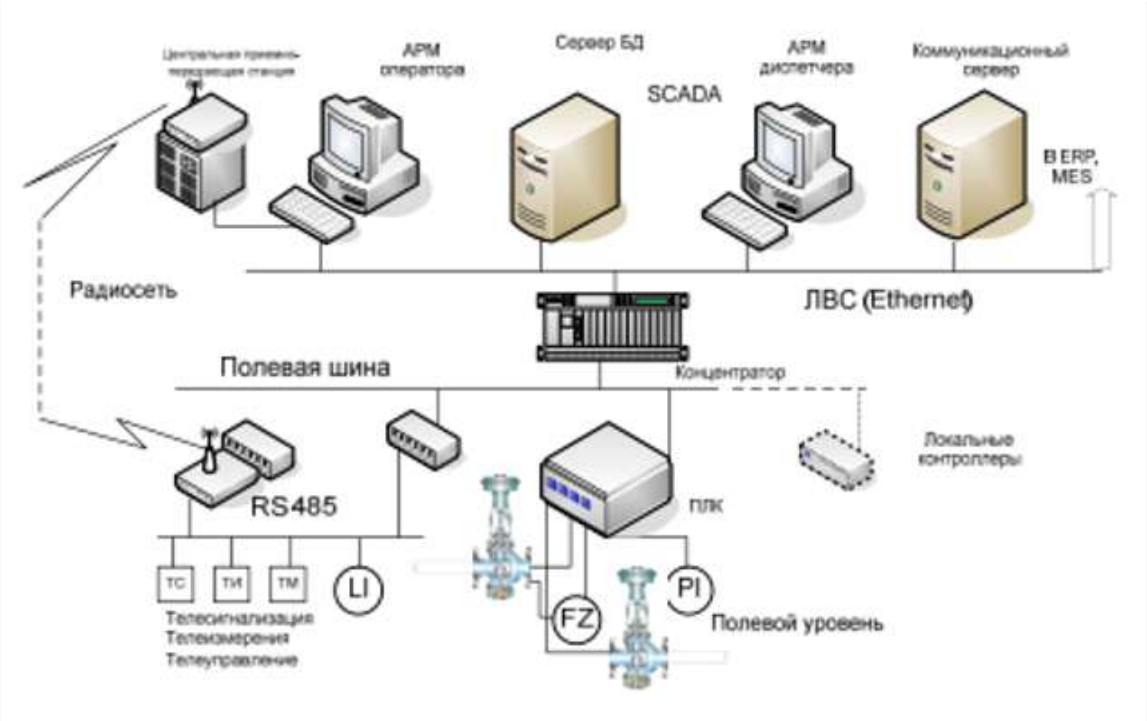

Fig. 3. ***Generalized structure of the control system***

According to the presented structural diagram, one can get an idea of the complex of technical means of a multi-level control system for technological processes in the oil and gas industry from various points of view: from the point of view of communication features; hierarchy of automated equipment and tasks solved by the AU. As a rule, these are two- or three-tier systems. At these levels, direct control of technological processes is realized. The specificity of each specific control system is determined by the software and hardware platform used at each level.

The lower level (field) consists of primary sensors (measuring transducers) that collect information about the progress of the technological process, drives and actuators that implement regulatory and control actions. cable connections, terminal blocks and standardizing converters.

The middle level (controller) consists of controllers and other devices for analog-to-digital, digital-to-analog, discrete, pulse, etc. conversions and devices for interface with the upper level (gateways). Individual controllers can be connected to each other using controller networks. Controller networks are built on the basis of RS-232 interfaces. RS-

485 or (using appropriate controllers) Profibus, HART, CAN and other OPC and SCADA systems compatible with servers.

The upper level (information and computing) consists of computers connected to a Fast Ethernet local area network (possibly Ethernet) using a copper twisted pair or (at long distances) fiber optic as a transmission medium. Data Transfer Protocol - for remote TCP / IP connections.

Sensors from the lower level supply information to the middle control level to local controllers (PLCs), which can provide the following functions:

• collection, primary processing and storage of information about the state of equipment and parameters of the technological process;

• automatic logical control and regulation;

• execution of commands from the control room;

• self-diagnostics of the software and the state of the controller itself;

• exchange of information with control points.

The functional diagram of automatic monitoring and control is intended to display the main technical solutions taken in the design of automation systems for technological processes. The object of control in automation systems of technological processes is a set of main and auxiliary equipment, together with shut-off and regulating bodies built into it.

When developing a functional diagram of the automation of a technological process, it is necessary to solve the following tasks:

· giving the receipt of primary information about the state of the technological process and equipment;

· the task of direct influence on the TP to control it and stabilize the technological parameters of the process;

· the task of monitoring and registering technological parameters of processes and the state of technological equipment at the local and central control panels (boards).

When developing a functional diagram, it is determined:

1) an appropriate level of automation of the technological process;

2) the principles of organizing control and management of the technological process;

3) technological equipment controlled automatically, remotely or in both modes at the request of the operator;

4) the list and values of monitored and regulated parameters;

5) control methods, type of regulation and management;

6) the scope of automatic protections and interlocks of autonomous control circuits of technological units;

7) a set of technical means of automation, type of energy for information transmission;

8) the location of the equipment on the technological equipment, on boards and control panels.

The automation scheme should be designed in such a way that it can be easily determined from it:

1) the parameters of the technological process, which are subject to automatic control and regulation;

2) availability of protection and alarm;

3) accepted blocking mechanisms;

4) organization of control and management points;

5) the functional structure of each unit for monitoring, signaling, automatic regulation and control;

6) technical means with the help of which one or another functional unit of control, signaling, automatic regulation and control is implemented.

To regularize this information in the database, tables and record fields are used. Channel record fields contain mostly information about the source of the information:

· code of the source of information;

· name / description of the source of information;

· type of;

· address (channel / message);

· event code;

· emergency code;

· sampling interval;

· primary (raw) value of the controlled parameter;

· converted value.

To convert primary information from objects with analog signals into operating values, additional parameters are required:

· scale factors;

· units;

· minimum / maximum values.

These fields in the project can be summarized in a table, an example of which is given below (table 1).

Table 1. Table and fields of records of the AC information source

Field name	Meaning	Comment
Code	T_101	Channel code
Description	Primarycircuit Temp.in	Description (primary circuit, inlet temperature)
Type	AI	Type: analog signal
Address	1_T_101	Address
Eventcode	1	Technological event code

Alarmcode	4	Alarm code
Sample (sec)	10	Sampling interval
Rawvalue	3228	Primary meaning
Convertedvalue	78.8	Converted ^{o}C value
Alarmstate	Yes	Emergency condition
Coefficient	0.0244	Conversion factor
Units	o_C	unit of measurement
Min	50.0	Minimum value
Max	85.0	Maximum value

The first column of the table contains the field name (attribute of the measurement channel). Database management systems used in SCADA require that the field name be represented in Latin letters. Each field, depending on the identifier, has its own meaning.

The code is used to uniquely identify an object in the database. It serves as a key and pointer to the corresponding entry.

The name (description) is a mnemonic text that is used to identify the device when displayed on the monitor screen.

The type indicates whether the object is an input or an output and determines the nature of the information (analog, discrete, counter, etc.).

Address. The object must be tied to a specific input channel and position in incoming messages from peripheral devices (1; T; 101). This can mean: 1 - channel, T - measurement type, 101 - measurement point.

The event code indicates whether the object in question will trigger some automated function to run when the value changes.

The trouble code shows what kind of trouble the trouble is. The alarm code is structured to indicate the severity or nature of the emergency.

Alarms can be simply warnings, or they can indicate an abnormal situation requiring immediate attention and response.

Sampling interval, scaling factors, limit and alarm values are necessary for the initial signal processing.

The following technique can be used to calculate the conversion factor. If we assume that the maximum temperature value is 100 ° C and this signal is converted by a 12-bit ADC, in which 0 in binary form corresponds to 0 ° C, and 100 ° C corresponds to 4095 bits, then the conversion factor will be equal to 100/4096= 0.0244 ° C / bit.

A conceptual description and separation of measurement results from the methods by which they are obtained is useful in cases where some of the characteristics of these quantities may change. As a result, there is no need to modify the control system. It is enough just to override the transformation parameters stored in the database.

Derived quantities. For any speaker, the ideal situation is when all the parameters of the technological process can be directly measured using sensors. In practice, this is often difficult, or it is simply impossible to measure some of the required variables. Therefore, AC can calculate derived variables based on those that are directly measured. As soon as new data is received for at least a few measured values, the derived values must be recalculated.

Access to the information contained in the database is performed using three main operations, which can be combined by operations of selection, projection and sorting. The operation of retrieving information from the database is called a query. Usually, for each specific situation, only a very limited number of database samples may be of interest, so a small set of standard queries can be defined in advance. Such queries are called protocols (these are ordinary queries in which projection and sorting operations are predefined, and only specific parameters need to be specified before running). Examples of protocols include emergency requests. They allow you to quickly record an accident in a special log file with an indication of the time of the event. Another protocol is the maintenance protocol (replacement of worn instruments, calibration, lubrication control, etc.).

SCADA systems are usually equipped with their own database. This database contains items of data called tags or points. A point is a single input or output whose values are monitored or adjusted in the system. Points can be hardware or software. The hardware point represents the actual input or output within the system, and the soft point generates the result of mathematical and logical operations on other points. Points are usually stored as pairs of values for the time when the event was logged and the time it was computed. A series of time pairs represents the chronology of a given point.

An example of a description of information support.

The information support of the system includes the following signals and data:

• signals of the lower level;

• signals transmitted over the Modbus TCP / IP network between the processors of the control panels of the automated process control system of the refinery and the operator's workstation;

• documents in the form of files or hard copies; electronic files, archives, databases;

• graphic (information and control) elements on the operator's workstation monitors (video frames, control windows, text messages, tabular forms, etc.).

The parameters transmitted to the local area network of enterprises in the OPC format include:

· Instantaneous consumption through the KKK pipeline, tn / hour;

· Consumption through the KKK pipeline integral, tn;

· Oil temperature, oC;

· Oil viscosity, Cst;

· Oil density, kg / m3;

· Instantaneous flow rate along the lines, tn / h;

· Temperature in the preparation device B, ºC.

The signals are generated by the PLC. A mixed alphanumeric cipher is used to identify the measurement and signaling parameters. The symbolic (alphabetic) part of the cipher consists of two or three letters. The first letter (or the first two) designate the parameter, and the last one indicates the type of information coming from the sensors (for example: T - measurement, C - alarm).

The list of identifiers of parameter assignments: P - pressure or pressure drop;

T - temperature;

L – level.

OK - opening limit switch. The numerical part of the cipher consists of three digits, grouped in a series, indicating that this parameter belongs to certain technological installations, objects or systems.

Various types of reports are automatically generated on the dispatcher's workstation. Reports are generated according to the following schedules:

· every even / odd hour (two-hour report);

· every day (two-hour report at 24.00 every day);

·every month;

· at the request of the operator (operational report).

Reports are generated according to the specified templates:

· summary on the current state of equipment;

· summary of current measurements.

Summary on the current state of equipment - a report that contains a list of all technological objects of monitoring and control, indicating the current state (at the time of the report generation).

Assignment for the development of a scheme of information flows of the AU

In the dissertation work, it is necessary to provide the following description of the section of the information support project:

· define (list) objects (data sources) that should be in the database;

· to reveal connections between objects (input, output, signaling, control, etc.);

· determine the basic properties of objects (data type, units of measurement, measurement limits, etc.);

· determine the operations performed when creating and changing information (transformation, scaling, calculation, etc.);

· define a set of standard queries;

· describe the scheme of information flows.

The developed scheme of information flows, similar to the one shown in Figure 9, must be placed in the album.

The choice of means for the implementation of the AU

The task of choosing the software and hardware for the implementation of the AU project is to analyze the options, select the AU components and analyze their compatibility.

In this section, the choice of measuring, executive devices, controller equipment, and alarm systems should be justified.

Measuring devices collect information about the technological process. Actuators convert electrical energy into a mechanical or other physical quantity to influence the control object in accordance with the selected control algorithm. The controller equipment performs computational tasks and logical operations.

Selection of controller equipment

The main task of the AU is the implementation of algorithms for automated control of the technological process (input of measurement signals, calculation of the control action, output of control signals of the executive body). To solve these problems, a programmable logic controller (PLC) is used, which includes a processor module and input-output modules, which are often called object communication devices (OCD) (Figure 4). USO carry out, if necessary, normalization of signals (reduction to a unified signal level), converting them into a digital code and input / output operations.

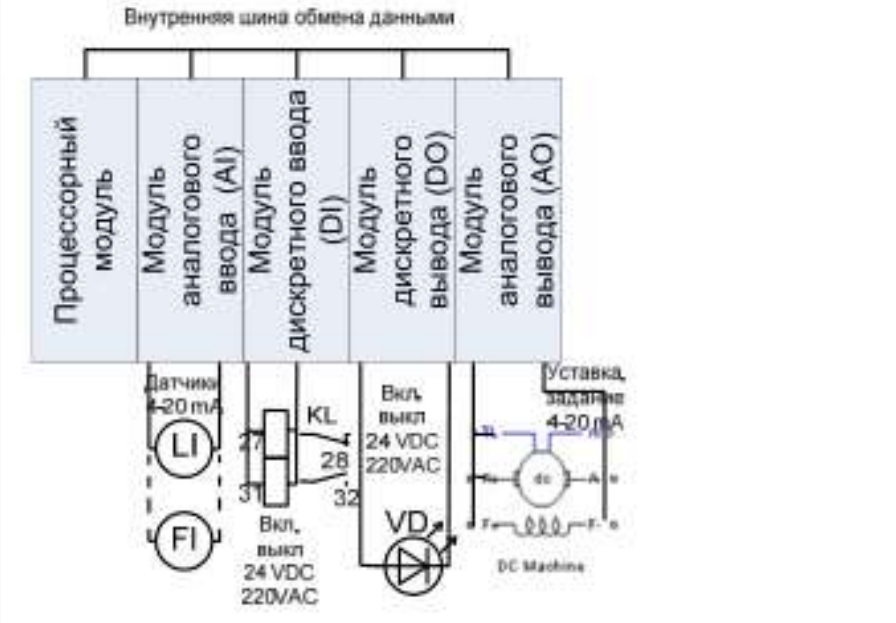

Fig. 4. ***PLC I / O devices***

The processor part is the central control unit of the USO. It performs various types of calculations, including computational scaling of signals and logical support of protocols for exchanging information frames with surrounding objects.

As you can see from Figure 4, sensors and actuators are connected to I / O modules using electrical cables. Depending on whether the module serves to input signals from sensors into the control system or outputs control signals to actuators, the modules carry out respectively analog-to-digital (ADC) or digital-to-analog conversion (DAC).

Basic I / O modules are of four types: analog and digital I / O modules.

Analog input modules (AI, analogueinput). They receive from sensors connected to its inputs, electrical signals of a unified range, for example: 0–20 or 4–20 mA (current signal);

The modern market for controllers and software and hardware systems is very diverse. The choice of the most acceptable option is a multi-criteria problem, the solution of which is a compromise between cost, technical level, reliability, comfort, service costs, software completeness and many others.

Therefore, it is important to highlight their main characteristics and properties, on the basis of which a choice can be made when building control systems.

Seven generalized indicators are proposed as such characteristics in the implementation of the AU project:

· processor characteristics;

· characteristics of the peripheral part of the PLC;

· characteristics of input / output channels supported by controllers;

· communication capabilities;

· terms of Use;

· technical support;

· software.

The characteristics of the processor are the type, bit width of the main processor board, and the operating frequency; support for floating point math, allowing for efficient data processing; the presence of bit operations, the number of manipulations for data

processing, the capabilities of the interrupt system. The fewer manipulations for data processing, the more preferable such a processor in the AS.

The characteristics of the PLC peripheral part are the presence and amount of different types of memory: RAM, ROM, EPROM, EEPROM, Flash, the number and variety of input-output channels.

The main distinguishing feature of E (E) PROM (including Flash) from ROM - non-volatile memory is the possibility of reprogramming when connected to the standard system bus of a microprocessor device. The EEPROM implements the ability to erase a single cell using an electric current. Flash memory uses a slightly different type of transistor cell than EEPROM. Flash memory is technologically related to both EPROM and EEPROM. The main difference between flash memory and EEPROM is that erasing the contents of cells is performed either for the entire microcircuit, or for a specific block (cluster, frame or page). The usual size of such a block is 256 or 512 bytes, however, in some types of flash memory, the block size can be up to megabytes. You can erase both the block and the contents of the entire microcircuit at once. Thus, in the general case, in order to change one byte, first the entire block containing the byte to be changed is read into the buffer, the contents of the block are erased, the value of the byte in the buffer is changed, after which the block changed in the buffer is written. This scheme significantly reduces the speed of writing small amounts of data to arbitrary areas of memory, however, significantly increases the speed when sequentially writing data in large portions.

Benefits of Flash Compared to EEPROM:

· higher write speed with sequential access due to the fact that the erasure of information in the flash is performed in blocks;

· the cost of production of flash memory is lower due to the simpler organization.

The disadvantage is slow writing to arbitrary memory locations. Since it is processor memory, which is the main component of the control controller, the preferred memory

types are dynamic RAM (RAM). In turn, flash memory has a fairly high access speed, is non-volatile and has a low cost.

Most manufacturers supply the market for automation systems of a family of controllers, each of which is designed for a specific set of functions performed and the amount of information being processed. Among them there are families of the smallest (micro) controllers with low computing power, capable of supporting a maximum of several dozen I / Os, mostly discrete. The field of application of such controllers is data collection and emergency protection systems. Examples of such controllers include controllers of the MicroLogix family (Allen-Bradley), Direct Logic DL05 (Koyo), Nano (Schneider Electric).

Small controller families are capable of supporting hundreds of I / O and more complex functions. These controllers have fairly advanced analog I / O, floating point operations and PID control functions. This group of controllers includes SLC 500 (Allen-Bradley), TeleSAFEMicro16 (ControlMicrosystems), LOGO (Siemens).

Medium power controllers, possessing sufficient memory and speed, can handle already thousands of discrete, analog and speed type variables. They are used to automate small objects of oil and gas production, treatment and transportation. These are PLC-5 (Allen-Bradley), Premium (Schneider Electric), Direct Logic DL405 (Koyo) controllers.

Finally, some large firms produce a class of controllers of very high processing power, with memory measured in megabytes and gigabytes. Their ability to process tens of thousands of variables and predetermined one of the areas of application - as a hub for information received from local controllers.

The computational capabilities of this class of controllers make it possible to implement complex algorithms (adaptive, optimal control) used in the automation of continuous technological processes (oil and gas processing, petrochemistry). The most

prominent representatives of this group of controllers are ControlLogix (Allen-Bradley), Simatic S7-400 (Siemens), Fanuc 90-70 (GEFanuc), VME (PEPModularComputers).

The parameters of the controller in terms of the I / O channels it supports can often be decisive when choosing. It is important not only the number of I / O channels supported by the controller, but also the variety of I / O modules in terms of the number and levels of switched signals (current / voltage), as well as the ways of connecting external circuits to the I / O modules.

The signals switched by the digital I / O modules can have different AC and DC voltage levels. These are 12, 24, 48 VDC, 120 and 240 VAC with various current loads.

Analog I / O modules can switch signal levels in a variety of ways. These are 0-5 V, 0-10 V, ± 5 V, ± 10 V for voltage and 0-5 mA, 0-20 mA, 4-20 mA for current. There are special modules for inputting signals from thermocouples and resistance thermometers of various calibrations into controllers. The data on signal levels presented here certainly does not exhaust all the variety on the market.

The front panel of the I / O modules can contain LEDs indicating the status of external circuits.

One of the most important characteristics of controllers is their ability to support local, extended, remote, and distributed I / O.

Local I / O should be understood as such when the I / O modules are located directly on the same chassis on which the CPU module is located (this is sometimes called a crate scheme). Because the number of slots in the chassis is limited (maximum 16-18 for some controllers), then the number of local I / O may also be limited. The advantage of local I / O is that it has a high update rate. All other things being equal, the processing speed of these I / O is very high. This characteristic is especially important when it comes to the regulation of technological parameters.

To support more I / O channels, hardware manufacturers have provided their systems with DIN rail expansion options. The I / O modules on a DIN rail are interconnected with a specialized short cable and can be spaced a maximum of several tens of meters from the central one.

Some controller suites are capable of supporting multiple DIN rails with a large number of I / O modules.

For example, PLC-5 / 40L, PLC-5 / 60L (Allen-Bradley) controllers allow expansion of local I / O for faster data updates up to 16 I / O modules.

Remote I / O is used for systems in which there are a large number of sensors and other field devices located at a sufficiently large distance (1000 or more meters) from the central processor. This also applies to facilities in the oil and gas industry, which are often located at great distances from control points. This approach reduces the cost of communication lines by placing I / O modules near field devices.



Fig. 5. ***Organization of extended PLC I / O on a DIN rail***

Communication capabilities of controllers. The parameters of controllers characterizing their ability to interact with other devices of the control system include:

· the number and variety of ports in processor modules;

· the breadth of the set of interface modules and interface processors;

· supported protocols;

· speed of data exchange and length of communication channels.

The network structure of a multilevel control system is shown. This structure is based on a seven-level model of OSI interaction between software and hardware components of a LAN.

Top-level devices (computers, hubs) at their level exchange large amounts of information. This information is protected by acknowledgment and retry mechanisms at the communication protocol layer. The transferred data array can be available not only to the central device, but also to other network nodes of this level. This means that the network is peer-to-peer, defined by the peer-to-peer (peer-to-peer) communication model. Information delivery time is not a dominant requirement for this network (we are talking about hard real time).

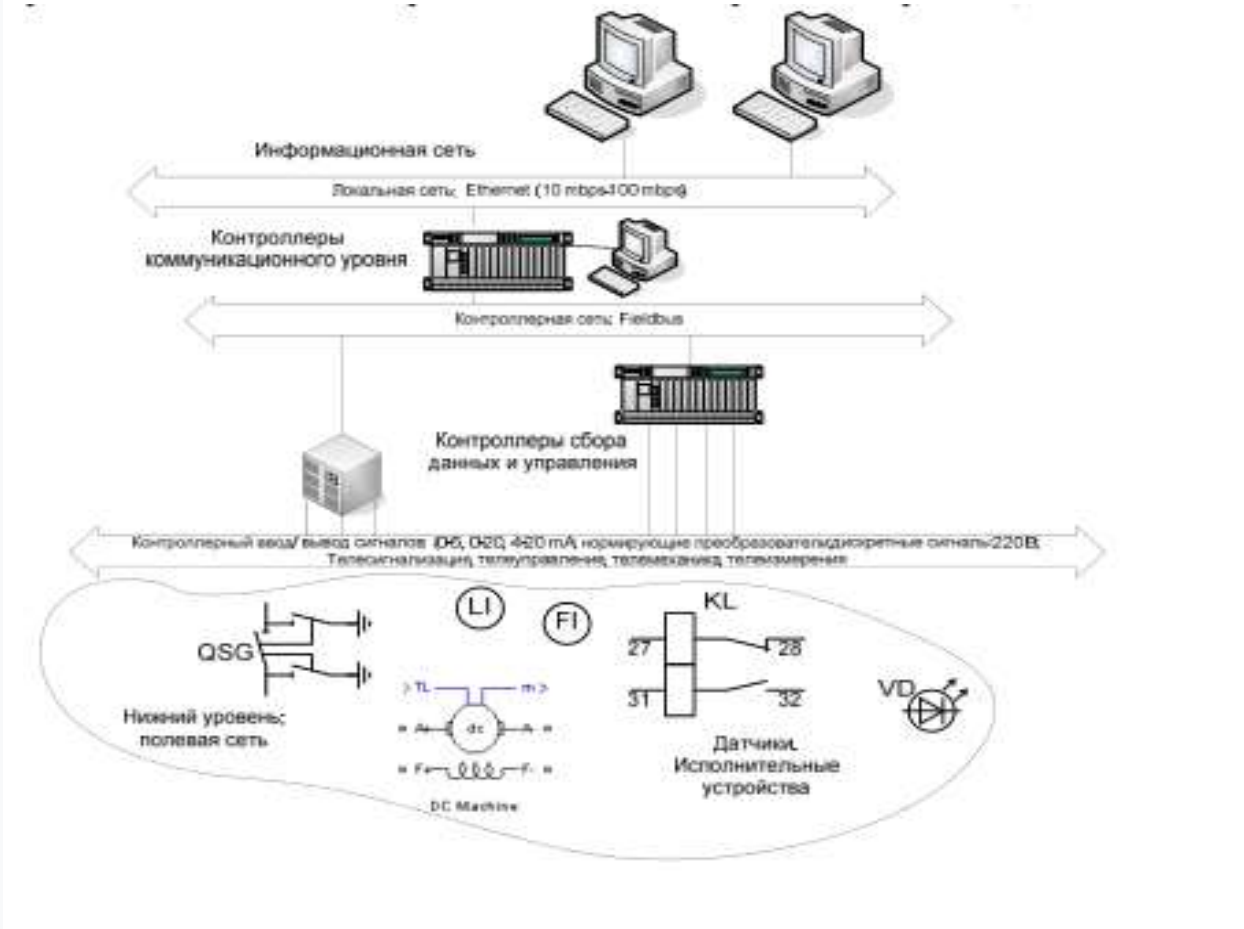

Fig. 6. ***Network structure of PLC communication***

Sensor selection

The choice of process parameters sensors was carried out in accordance with the standards and requirements of the enterprise, taking into account a number of metrological and operational factors, the most significant of which are as follows:

1. The distance over which the information taken from the sensors can be transmitted (sensor communication interface).

2. Limit value of the measured value and other parameters of the environment.

3. The permissible error for the AU, which determines the selection according to the sensor accuracy class. Measurement limits with guaranteed accuracy.

4. The inertia of the sensor, characterized by its time constant.

5. Influence of external environmental factors (temperature, pressure, humidity) on the normal operation of the sensors. Destructive effect on the sensor controlled and the environment, aggressive properties. The presence of vibrations, magnetic and electric fields, radiation, etc. in the place of installation of sensors that are unacceptable for its normal functioning.

6. Possibility of using the sensor in terms of fire and explosion safety.

Measuring instrument output signal interfaces.

In devices for obtaining information about the state of the technological process, a primary measuring transducer (PMT) and a secondary measuring transducer (SMT) are distinguished, which are connected to each other by means of wires and interfaces. PMT can be located both on the controller and on the control panel or directly in the sensor.

From the point of view of the functions performed, the PIP converts the measured parameter into a signal that is convenient for transmission and processing.

From the point of view of the principle of operation and design, they differ in a significant variety. These devices are installed at the facility and directly interact with the controlled parameter and the controlled environment. The type of the measured

parameter, the installation and operating conditions significantly influence the choice of the PMT. To measure one parameter, depending on the required technical characteristics and operating conditions, a large number of different sensors can be used (for example, more than sixty types of pressure sensors, more than fifty types of differential pressure sensors, etc.).

A distinction is made between the following main output signals of primary measuring devices (Figure 7):

PMT with current analog output;

PMT with digital output signal;

PMT with pulse (counting) output signal;

PMT with differential transformer signal.

The output signals of the sensors are not limited to this list. When choosing a sensor in the gearbox, you should limit yourself to only four basic types of output signals.

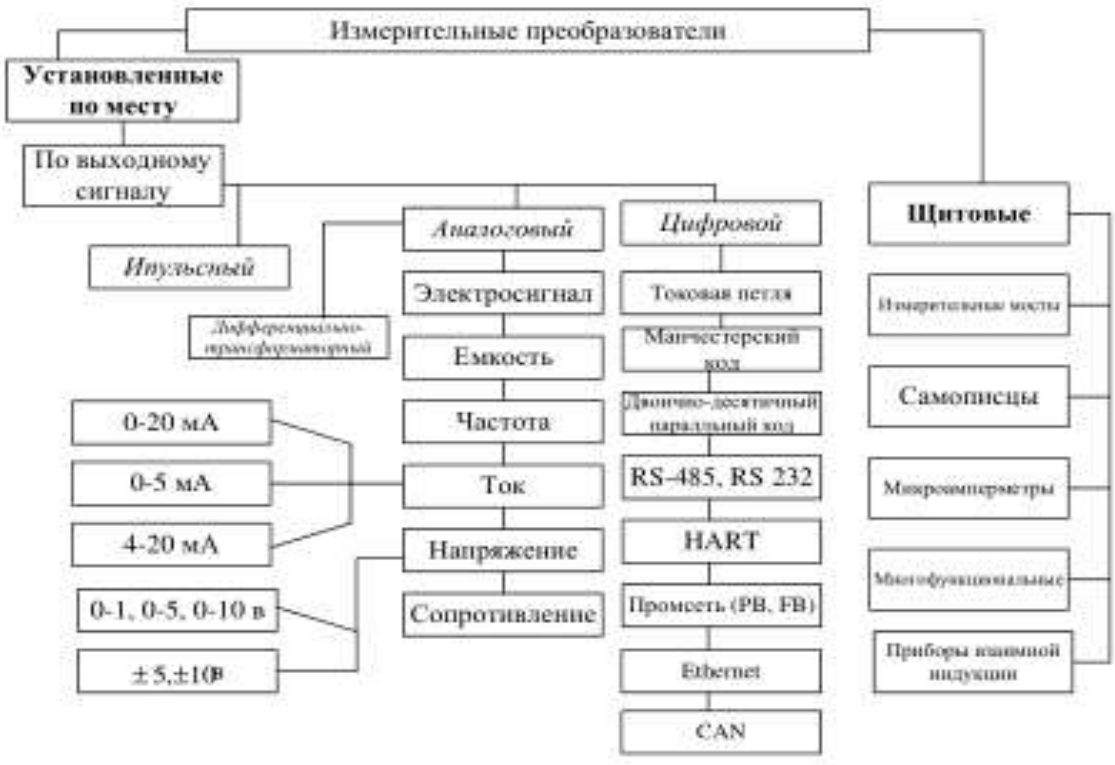

Fig. 7. ***Types of signaling and measuring devices***

The PMT with a differential transformer signal (inductive coupling) devices are outdated devices and in most cases must be replaced with current or digital output devices.

The pulse output of the PMT is a 5 V pulse or a pulse of the used input supply voltage, which can be 8 to 28 V. These sensors are often used in oil and gas technologies for remote monitoring of flow and totalizing flow through meters.

PMT with a current analog output have a built-in current source - a current generator with some internal resistance R_I. The current source is controlled by the function ***f (x)*** of measuring the parameter ***x*** (Figure 8). The current ***i = f (x)*** enters the communication line and creates a corresponding voltage drop at the input load resistor R_L of the secondary converter, which is then converted into a digital value of the measured parameter ***x***. PMT of this type have, as a rule, unified output signals in the ranges {0–5}, {0–20} or {4–20} mA. The current *yi* = 0 or ***i*** = 4 mA corresponds to a certain minimum value of the measured parameter ***x***, and the current *i* = *imax*. of {5–20} mA is the maximum value for this parameter. The maximum permissible length of the communication line between the PMT and the SMT depends on the value of the internal resistance R_I of the PMT, the active resistance R_L of the communication line, the input resistance R_L of the PMT, the expected level of interference and, as a rule, does not exceed several tens of meters. The number of communication wires between the PMT and the SMT is 2, 3 or 4. It depends on the power supply connection scheme or on the type of the PMT sensitive element (for example, thermal resistance).



Fig. 8. ***Two-wire current communication PMT and SMT***

Instrument suppliers often guide customers to a two-wire connection with a current signal of {4-20} mA and a four-wire connection at {0-20} mA (see Figure 9).

The use of unified signals is regulated by SS 26.011–80. Among the standard current and voltage signals, the most convenient and popular is the 4–20 mA current signal. The reason for this is that it best solves the problems associated with the transmission of signals from remote sensors to secondary measuring instruments:

1. Signals from primary converters are usually very small. For example, thermocouple signals are typically less than 50 mV. In an industrial environment, strong electromagnetic interference can create spurious signals that are hundreds or thousands of times higher than useful ones. Strong current signals of 4–20 mA drive low impedance loads and are therefore less susceptible to this effect.
2. For the transmission of 4-20 mA current signals, connection wires can be used that are cheaper than others. In this case, the requirements for the value of their resistance can also be reduced.
3. Another advantage of the 4–20 mA current signal is that when working with it, it is easy to detect a break in the communication line - the current will be equal to zero, beyond the possible limits. An open circuit with a 0-5 mA signal cannot be detected, because a current of zero is considered acceptable. To detect an open circuit in circuits with unified voltage signals (0-1 V or 0-10 V), it is necessary to use special circuit solutions, for example, "pull-up" with a higher voltage through a high-ohm resistor.

Wiring diagrams of power supplies (PSU) and secondary converters to sensors (Metran) in the 4–20 mA and 0–20 mA circuit are shown in Figure 9.

To connect thermal resistance sensors (RT), special circuits are used: two-, three- and four-wire.

In the simplest two-wire circuit for connecting resistive sensors, the resistance of the connection lines (CL) is included in the measurement error. This does not provide satisfactory metrological characteristics of the measuring channel if the resistance of the wires cannot be neglected.

The influence of the CL resistance in a three-wire circuit is eliminated by compensating with the resistance of the third wire. Compensation is performed on the assumption that the voltage drops across the wires are the same. This is true when the resistances of the CL wires are equal. The margin of error introduced by the lack of exact equality is usually negligible. However, for precision measurements, it is better to use a four-wire RT connection.

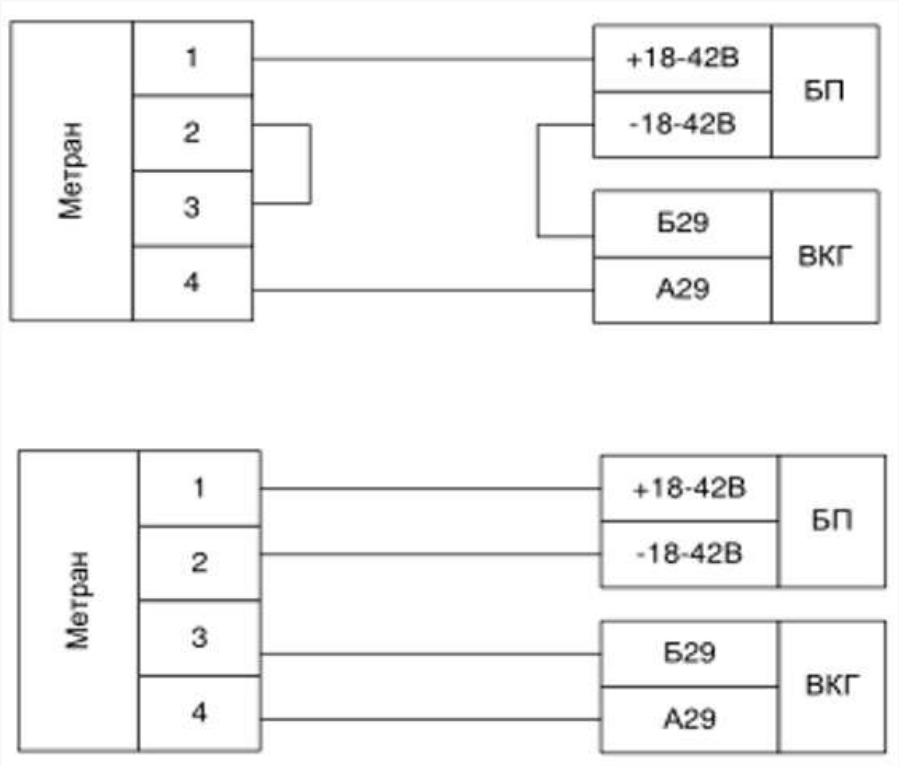

Fig. 9. ***Wiring diagrams 4-20 mA and 0-20 mA***

With a four-wire connection, the difference in resistance of the CL arms is insignificant. This gives rise to confidence in the insignificance of the influence and parameters of drugs.

However, this scheme also has disadvantages. The fact is that along with the imbalance of the shoulders, there is also such a parameter as the active resistance of the

drug. Although this parameter is generally considered to be a contributor to the error only for two-wire connections, it turns out to be significant in some way for both three- and four-wire connections.

The reason is as follows: the SMT contains a current source for interrogating the vehicle. An ideal current source has no load impedance limitation. For a real current source, there is always a limit value of the load resistance at which it delivers a given polling current. When this threshold value is exceeded, the source begins to underestimate the polling current, which leads to a sharp increase in the error. The effect is especially pronounced near the upper limit of the measurement range.

Unfortunately, the manufacturers of SMT do not standardize the maximum resistance of drugs for which their products work. As shown by the experiments carried out by LLC «Lenpromavtomatika» with the products of the world's leading manufacturers of SMTs, a significant error appears when the resistance of one CL increases over a value of about 30 Ohms. This value is justified by the fact that if the CL is copper wires and terminals, then there is no reason to assume that 30 Om will not be enough, because with a cross section of 1 mm2, this resistance corresponds to 1714 m of copper wire. Therefore, the parameter is not standardized. But it immediately becomes significant when a safety spark barrier appears between the SMT and the sensor.

PMTs with a digital output signal have, as a rule, a galvanically isolated output with an open collector of the transistor or a relay "dry" contact, which is powered from the side of the current source built into the power supply. In this case, depending on whether the PMT output is closed or open, the value of the current in the communication line has a value of i_{min} or i_{max}, which is determined by the discrete nature of the process of measuring the parameters of the energy carrier by the converter.

The sequence of "closures / openings" of the output circuit of the PMT generates at the input of the SMT a sequence of current binary pulses ("0", "1") of a certain frequency

and duration, which is used either for a digital representation of the measured parameter ***x***, or for a discrete representation (for example, norm / avar, on / off). Typically, the current in the communication line does not exceed 10–20 mA. The maximum permissible length of the communication line depends on the value of the SMT current, the active resistance of the line and can reach 3-5 km.

A digital PMT can have the following most common physical interfaces (the physical interface is determined by a special set of electrical connections and signal characteristics):

· PMT with current loop (CL);

· PMT with RS 232 or RS 485 output;

· PMT with HART-output;

· PMT with field bus (PB or FB);

· PMT with CAN.

The current loop PMT (CL) belongs to the class of universal point-to-point radial interfaces for remote serial access to systems. This connection is widely used in industrial equipment, it allows communication via physical lines over long distances - up to 3 km) without the use of data transmission equipment (modems). The CL interface is a two- and four-wire line forming a current loop with a discretely switchable current source and sink Serial data from the source to the receiver (Figure 10) is transmitted bit-by-bit and byte-by-bit asynchronously with DC signals i = 20 mA (sometimes 10, 40 or 80 mA signals are used). A current greater than 17 mA represents a logic “1” (marker), and a current less than 2 mA represents a logic “0” (blank). One of the interacting devices must be active and serve as a source of current, and the other - passive (receiver).

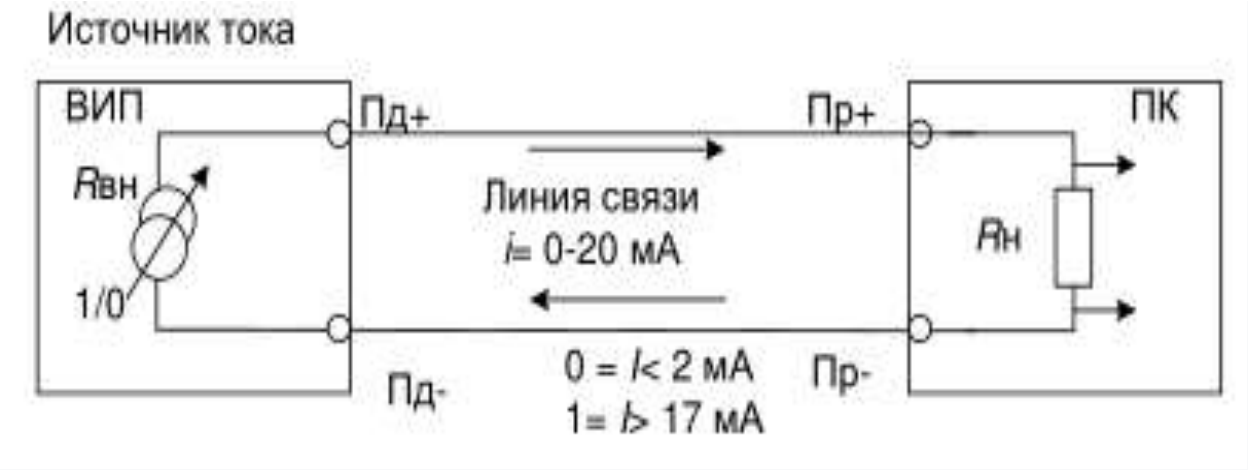

Fig. 10. ***Connection of the SMT with a computer by a communication line of the CL type***

Normalization of the error of the measurement channel. When developing a project, it is necessary to justify the measurement error. For this, it is recommended to use the method of estimating the error of the measuring channels of automated control systems for technological processes by the calculation method under conditions of limited initial information, when direct experimental estimation of the error is practically impossible or economically unjustified.

When calculating the sensor error, it is recommended to use for the selected measurement channels the list of error components and their percentage level, which is given in Appendix G. An example of a generalized structure of a measuring channel for measuring temperatures using resistance temperature converters (according to SS 6651-94) AC is shown in Figure 11.

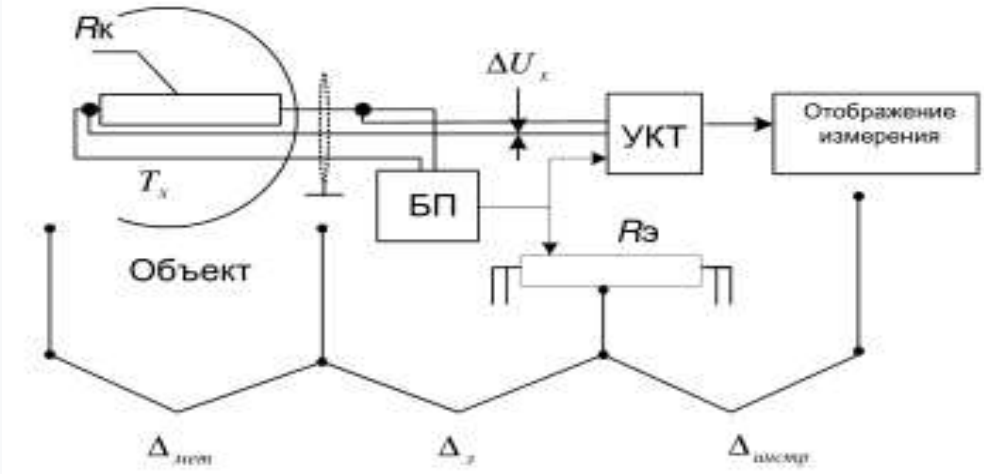

Fig. 11. ***Generalized structure of the measuring channel***

Selection of actuators. An executive device (ED) is a device in a control system that directly implements a control action from a regulator on a control object by mechanically moving a regulating body (RB).

The regulating action from the executive device should change the process to achieve the set task - optimization (or) stabilization of the quality of the controlled variable. This impact can be carried out in various ways, namely:

- a change in the amount of the incoming substance due to throttling of its flow or due to a change in the productivity of the unit;

- a change in the amount of introduced heat due to a change in the incoming heat carrier or fuel;

- a change in the dose of a substance due to a change in the direction of its intake or the speed of rotation of the drive mechanism for supplying this substance, periodically turning on or off the units, stopping the supply of the substance or stopping the units in order to avoid emergency production situations.

Combinations of these methods are possible. To implement one of the specified methods of control action, actuators with different operating principles and design can be used.

The basis of technological devices (control objects) in the oil and gas industry are:

· Technological devices of pumping and compressor types.

· Measured technological devices (metering units, reservoirs, wells).

· Sediments, separators, electrohydrators.

· Heating units.

· Devices for dosing chemicals.

· Transformer substations and switchgears.

Each of the listed technological devices is controlled by its own type of executive devices.

Depending on the energy used, the actuators can be divided into the following types:

- pneumatic (with pneumatic ED);
- electrical (with electrical ED);
- hydraulic (with hydraulic ED);
- electro-pneumatic (pneumatic ED with an electro-pneumatic converter);
- electrohydraulic (hydraulic ED with an electrohydraulic converter);
- pneumohydraulic (hydraulic ED with a pneumohydraulic converter).

Depending on the design features of the regulatory body, the executive devices are divided into types:

- damper;
- single-seat;
- two-seat;
- three-way;
- hose;
- diaphragm.

Actuators consist of two main functional units:

1) a regulating body (drive) designed to control the actuator in accordance with command information received from the control device;

2) an actuator - a valve, a damper, affecting the process by changing the throughput of the pipeline.

Selecting an alarm system for an automated system (AS)

The following alarm systems are used in the oil and gas industry:

· Gas alarm systems;

· Fire alarm systems;

· Alarm systems;

· Technological signaling systems.

Signaling is one of the main functions of the speaker. For this, sound and light indicators, special screen forms are used.

Signaling serves to provide the following types of information:

· Indication - to attract the attention of the operator or send him a signal about the performance of a certain action. For this, red, yellow, green and blue are usually used;

· Confirmation - to confirm a command, state or mode, end of a change or transition period. For this, white and blue are usually used. In some cases, green can be used.

Unless otherwise agreed between the manufacturer and the user, the transparent caps of the indicator lights and lamps shall correspond to the standard color code, taking into account the mode of operation (state) of the machine. In accordance with SS 29149, colors can be assigned other values according to one of the following criteria:

- safety of personnel and the environment;

- the condition of the electrical equipment.

For differentiation or additional information and, in particular, to activate more attention, flashing lights are used, used for the following purposes:

- attracting attention;

- requirements for immediate action;

- indications of a mismatch between the command and the actual state;

- indication of the change in progress (blinking during transient mode).

For priority information, it is recommended to use the highest frequency of flashing lights (SS 29149 contains information on the frequency of flashing and the pulse / pause ratio).

Selection (justification) of control algorithms for the AS

The document "Description and logic diagrams of algorithms", depending on the specifics of the AU, may be developed as a document "Description of algorithms", or as a document "Logic diagrams of algorithms".

For each algorithm, the document "Description of Algorithms" contains sections:

· Management objectives.

· Management strategy (mathematical description).

· Algorithm for solving.

The Management Objectives section provides:

1. Purpose of the algorithm.

2. Designation of the document "Description of the algorithm" with which this algorithm is associated (if necessary).

3. Restrictions on the possibility and conditions of application of the algorithm and characteristics of the solution quality (accuracy, solution time).

4. General requirements for input and output data (formats, codes), ensuring the correct operation of the algorithm.

The section "Management strategy (Mathematical description)" provides:

1. A list of the accepted assumptions and assessments of the compliance of the adopted control strategy with the real process in various modes and operating conditions (for example, stationary modes, modes of starting and stopping units, emergency situations).

2. Mathematical description of the process.

3. Information about research projects, if they are used to develop an algorithm.

The section "Algorithm for solving" provides:

1. A step-by-step description of the logic of the algorithm and the method for generating the solution results, indicating the sequence of execution of functional blocks or steps, calculation or logical formulas used in the algorithm.

2. Rules for checking the validity of input data and calculations.

3. Description of connections between parts and operations of the algorithm.

4. Links to relevant automation diagrams and block diagrams.

5. Printout of detailed configuration of function blocks or program text.

The algorithm should provide for all situations that may arise in the process of solving the problem.

When describing the algorithm, you should use the conventions of attributes, signals, graphs, lines with reference to the corresponding arrays and lists of signals.

In the calculated ratios (formulas), the designations of the details given in the description in other sections of the document should be used.

The algorithm is presented in one of the following ways:

1) graphical, in the form of a diagram;

2) tabular;

3) text;

4) mixed graphic or tabular with the text part.

The method of presentation of the algorithm is chosen by the developer, based on the essence of the algorithm, his experience and the possibility of a formal description of actions.

Different algorithms are used in the AS at different control levels:

Algorithms for starting (starting) / stopping technological equipment (relay start-up circuits).

Relay or PID algorithms for automatic regulation of technological parameters of technological equipment (control of the position of the working body, regulation of flow rate, level).

Control algorithms for the collection of measuring signals (algorithms in the form of universal logically complete program blocks).

2.2. Technical characteristics of the controller OVEN TRM-138

The universal eight-channel TRM-138 meter-regulator is designed to build automatic control and regulation systems for production technological processes in various industries, including those controlled by Rostekhnadzor, in agriculture and utilities.

During operation, the device performs the following main functions:

- allows configuring the functional diagram and setting programmable operating parameters using the built-in control keyboard;

- makes measurements of physical parameters controlled by the input primary converters, taking into account the nonlinearity of their NSH;

- carries out digital filtering of the measured parameters from industrial impulse noise;

- allows you to correct the measured parameters to eliminate errors in primary converters;

- displays measurement results on a built-in four-digit LED digital indicator;

- generates an alarm signal when a malfunction of the primary converters is detected with displaying its cause on a digital indicator and, if necessary, outputs it to an external alarm;

- generates control signals for external actuators and devices in accordance with user-specified laws and regulation parameters;

- displays the set control parameters on the built-in LED digital indicator;

- generates commands for manual control of actuators and devices from the instrument keyboard;

- transfers information to the computer about the values of the values monitored by the sensors and the set operating parameters, and also receives data from it to change these parameters;

- Supports OVEN, Modbus-RTU (Slave) and Modbus-ASCII (Slave) exchange protocols;

- saves the specified programmable parameters in the non-volatile memory when the supply voltage is turned off.

Display and control elements

On the front panel of the device there are digital and single LED indicators that serve to display current information about the parameters and modes of operation of the device; as well as six buttons designed to control the device.

Four-digit digital indicator DI-1 displays the measured or calculated value of the parameter in the selected control channel; in case of an emergency, the indicator displays the serial number of the faulty sensor. Two display modes are possible:

static mode - the choice of the indication channel is made by the operator using the control buttons located on the front panel of the device, and is controlled by the illumination of the corresponding LED "CHANNEL";

cyclic mode - information about each control channel is displayed in a closed loop for a user-specified time.

The four-digit digital indicator DI-2 displays the setting of the control channel displayed on the display; in case of an emergency, the indicator displays the cause of the sensor malfunction in a symbolic form.



The two-digit digital indicator DI-3 displays information about the input parameter connected to this channel (for example, sensor "d1").

LEDs **"CHANNELS 1 - 8"** constantly illuminate the number of the parameters of which are

currently displayed on the display, blinking illumination indicate an emergency situation in this monitoring channel or triggering a warning signal in it.

Instrument specifications

The main technical characteristics of the device are shown in tables 2, 3, 4.

Table 2 - ***General characteristics of the device***

Name	Meaning
Supply voltage range	90 to 264 VAC (from 47 to 63 Hz) current
Power consumption, no more	12
Number of measuring inputs in the device	8
Polling time of one channel, s, no more	0,6
Built-in power supply voltage	(24 ± 3) V DC current (maximum 150 mA)
Computer interface	RS-485
Data transfer rate under the protocol, kbit / s: OVEN, Modbus-RTU, Modbus-ASCII	2,4; 4,8; 9,6; 14,4; 19,2; 28,8; 38,4; 57,6; 115,2
Overall dimensions of the case 4, mm	96 × 96 × 145
Overall dimensions of the case 7, mm	144 × 169 × 50,5
Device weight, kg, no more	1,0

Table 3 - ***Input primary converters***

Symbol for the transmitter or signal	**Measuring range**	**Least significant unit value ***	**Limits of the basic reduced error,%**
Resistance thermometers according to SS R 8.625 or resistance thermocouples according to SS R 6651 *			
Cu 50(α =0,00426 °C^{-1})	–50 ÷ 200°C	0,1°C	±0,25
50 M(α =0,00428 °C^{-1})	–190 ÷ 200°C	0,1°C	
Pt 50 (α =0,00385 °C^{-1})	–200 ÷ 750°C	0,1°C	
50 П (α =0,00391 °C^{-1})	–200 ÷ 750°C	0,1°C	
Cu 100 (α =0,00426 °C^{-1})	–50 ÷ 200°C	0,1°C	
100 M(α =0,00428 °C^{-1})	–190 ÷ 200°C	0,1°C	
Pt 100(α =0,00385 °C^{-1})	–200 ÷ 750°C	0,1°C	
Unified signals of constant voltage and current in accordance with SS 26.011			
Voltage from 0 to 1 V	0 ÷100 %	0,1 %	
Constant voltage signal			
from –50,0 to 50 мВ	0 ÷100 %	0,1 %	±0,25

Table 4 - ***Output devices (OD)***

OD name (type designation)	**Specifications**	**Meaning**
Relay electromagnetic (R)	Maximum load current	1 A
	Maximum load voltage of alternating current, not less	250 V 50 Hz and cosφ>0,4
	Maximum DC load voltage, not less	30 V
Optocoupler transistor n-p-n-type (K)	Maximum load current, not less	400 mA

	Maximum voltage, not less	60V DC
Opto-parasimistor (C)	In external triac control mode:	
	current (with a pulse duration of no more than 2 ms and a frequency of (50 ± 1) Hz), no less	400 mA
	operating voltage, not less	250 V, 50 Hz
	In load switching mode:	
	load current, not less	40 mA
	operating voltage, not less	250 V, 50 Hz
Output for driving an external solid state relay (T)	Open circuit output voltage	(6 ± 0.5) V DC
	Output voltage at a load of 250 Ohm, not less	3.3 to 4.9 V direct current
	Short circuit current	50 to 72 mA
DAC "Parameter-current" (I)	DC output signal	4 to 20 mA
	Load resistance	0 to 1300 Ohm
	Rated load resistance	700 Ohm
	DAC supply voltage	10 to 36 V
	DAC rated supply voltage	(24,0 ±3,0) V
DAC "Parameter-voltage" (Y)	Constant voltage output	0 to 10 V
	Load resistance, not less	5 kOhm
	DAC supply voltage	15 to 36 V
	DAC rated supply voltage	(24,0 ±3,0) V

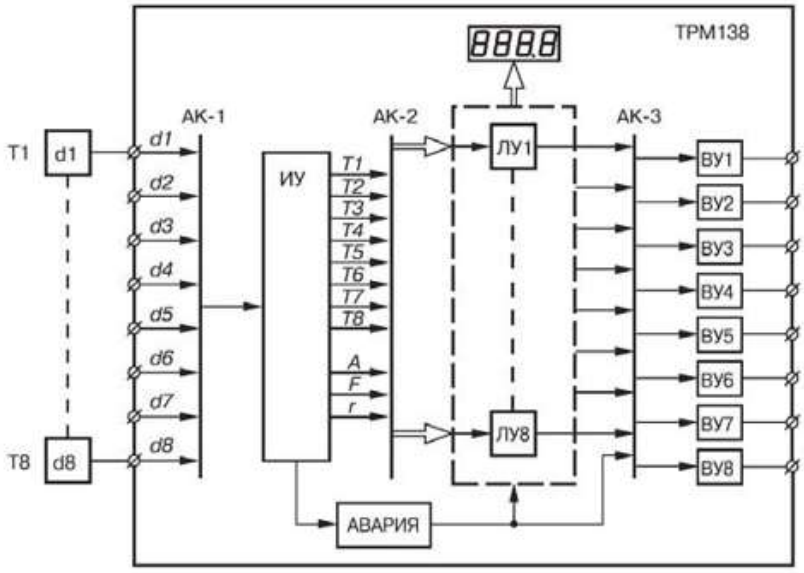

Fig. 12 - ***Functional diagram of the device***

The functional diagram includes the following components:

- d1 - d8 - input primary converters (sensors) for monitoring the physical parameters of the object (they are not included in the device and are conditionally introduced into the circuit for the convenience of describing its operation);

- AS-1 - automatic device for switching signals of primary converters for their transmission to the measuring device;

- MD - a measuring device for converting sensor signals into digital values of the parameters controlled by them, as well as for calculating the mathematical values necessary for the operation of devices;

- AS-2 - automatic device for switching the measured input parameters for their transmission by logic devices;

- LD1 - LD8 - logical devices for generating control signals of the MD and for outputting the measured values of input parameters to the CD;

- AS-3 - automatic switching device for transmitting LU signals to MD;

- CD1 - CD8 - CD for matching control signals (generated by LD1 - LD8) with the operation of external equipment that regulates the parameters of the object or monitoring its state.

The connection diagram of the LD with the input sensors and the CD is set by the user when setting the operating parameters of the device, which allows the device to be configured according to a convenient scheme for use.

2.3. Instruments for measuring physical parameters (pressure, temperature, flow rate, humidity, level, etc.)

Digital pressure gauge for measuring pressure

Digital pressure gauges are designed to measure the excess pressure of non-aggressive, non-crystallizing liquids, steam and gas, incl. oxygen in systems of automatic control, regulation and control of technological processes.

Designed to measure excess and vacuum pressure of non-crystallizing liquids, steam and gas, non-aggressive parts to materials in contact with the measured medium, and closing or opening of electrical circuits when the specified pressure limit is reached.



The digital pressure gauge model MO-05 is a Russian high-precision digital device for precision pressure measurement.

Compact and easy-to-use digital high-precision pressure gauges of the MO-05 series are a worthy replacement for 1st and 2nd category deadweight testers. They are designed for accurate measurements of pressure values with indication of the results on a digital display, with a permissible reduced basic error on each sub-range of no more than ± i: 0.025% and 0.05%.

One of the parameters most often subject to control and regulation for the correct course of the technological process is temperature. Temperature is the most commonly measured parameter in technological processes. Temperature is often the determining factor in the operation of an industrial process.

If the temperature measurement is inaccurate or unreliable for one reason or another, it can negatively affect indicators such as process efficiency, energy consumption and product quality. Even a small error in temperature measurement can cause some process shutdown or be very expensive, so it is extremely important to have confidence that the temperature is measured accurately and reliably. Also, temperature is one of the main quality parameters of the supplied heat carrier and is included in the formula for calculating heat energy, therefore, temperature measurement is an important task for both the heat consumer and the supplier.

Rosma BT thermometer

Bimetallic thermometers Rosma BT are used to measure the temperature of liquids and gases, as well as bulk and viscous media.



Radial bimetallic thermometer is designed to measure the temperature of liquids, steam and gases in heating and sanitary installations, in air conditioning and ventilation systems. The principle of operation of Rosma BT thermometers is based on the dependence of the deformation of the sensitive element on the measured temperature. A bimetallic spring is used as a sensing element. The bimetallic spring is made of two firmly connected metal plates with different temperature coefficients of linear expansion. When the temperature changes, the spring bends and rotates the thermometer needle. One end of the spring is fixed inside the stem, and the arrow axis is attached to the other.

The thermometer body is made of corrosion-resistant steel, the stem is made of stainless steel.

The device should only be used to measure temperature in the environment for which it is intended; do not exceed the measuring range. Do not use solvents or abrasives to clean the glass. The device must be excluded from operation and returned for repair if: the device does not work; the arrow moves in leaps; the error of readings exceeds the permissible value.

Vortex Flowmeters Kobold DVH-R



In the design of the vortex flowmeter DVH-R manufactured by KOBOLD, three main types of sensors are used to measure the mass flow of gases, liquids and steam: a vortex flow velocity sensor, a resistance thermocouple and a semiconductor pressure sensor. Systems based on external process measurements are not able to adequately compensate for possible radical changes in the process conditions between the section where the flow rate is measured and the section where the outlet or inlet pressure and temperature are measured. The DVH-R multivariable flowmeter measures all process parameters at one point, which provides higher accuracy. The combination of a wide range of output signals, with the ability to be limited to just one device in the pipeline, simplifies the system and reduces initial equipment, installation and maintenance costs.

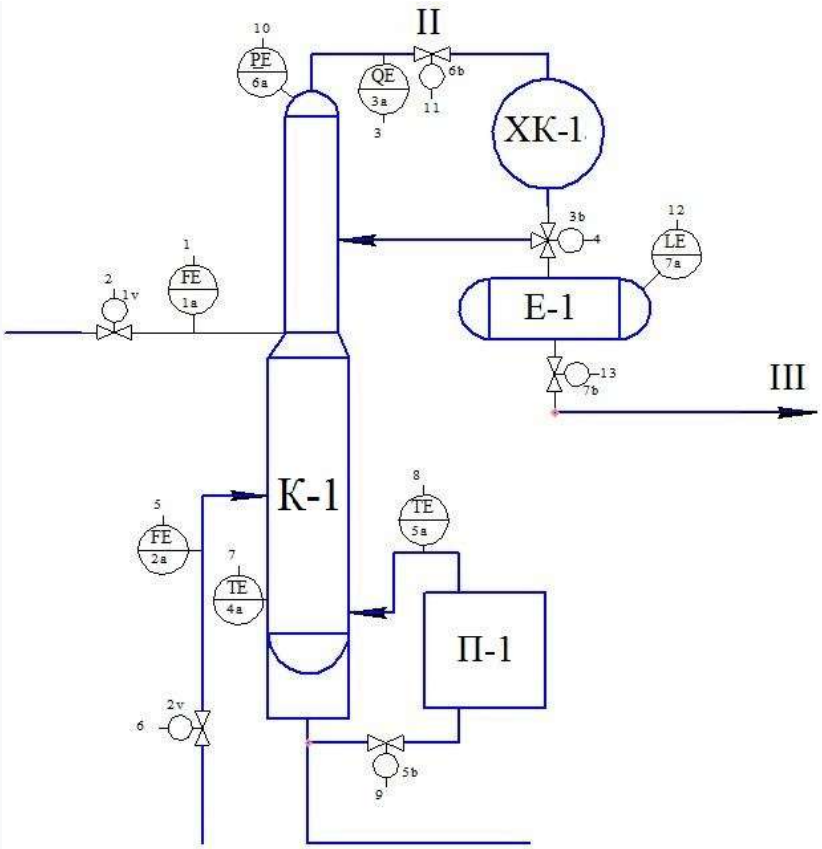

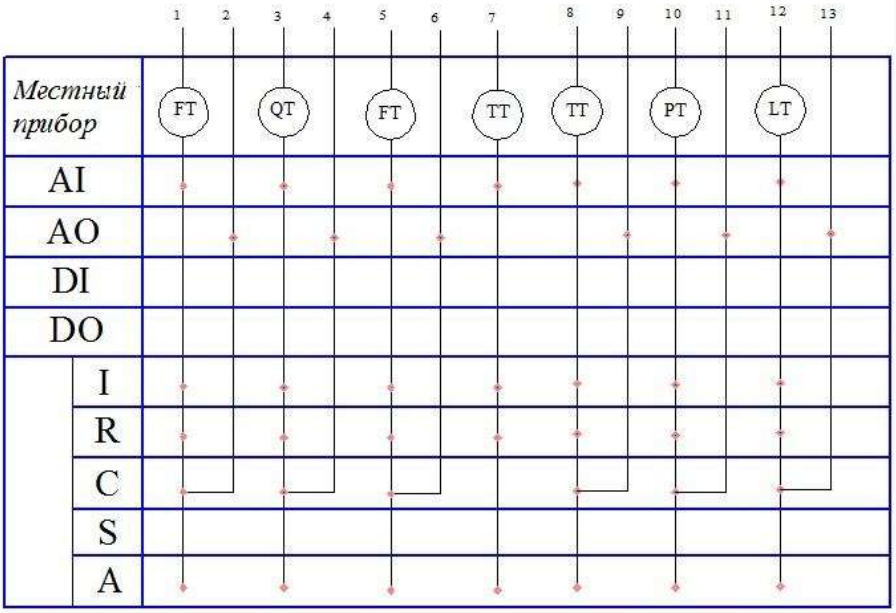

Distillation column automation

III. Research and adjustment of the control loop

3.1. Functional diagram of the control loop

The task of the control system under study is to maintain a constant pressure in the supply line of strictly reflux to the top of the topping column with correction for the temperature of the top of the column.

The need for regulation is explained by the fact that the pressure of gasoline directly determines the degree of heating of the top of the column, and the latter has a significant effect on the process of oil topping. The same fact determines the basic requirements for the speed and accuracy of the control loop: gasoline vapors at the outlet of the column must be heated to a temperature of 150 ° C (gasoline evaporation temperature).

Pressure control with temperature correction consists in the fact that the preset value of gasoline pressure is calculated in each cycle of the control program according to a method that takes into account changes in temperature and pores (a linear relationship is used). Since during the research the real control action is replaced by a single step signal, the fact of correction is not required to be taken into account, and all the results obtained for the adopted system will also be valid for the original one.

The functional diagram of the control loop is shown in Figure 13.

The control object is a control valve, its output parameter is the flow area of the valve. The section of the pipeline connecting the valve with the pressure sensor transfers the medium (gasoline) and its pressure, converting S (t) into P (t). P (t) is the input signal for the pressure sensor (PE 59-1). The signal from the sensor - Y (t), enters the adder, where it is compared with the calculated reference action Yset (kT (t)).

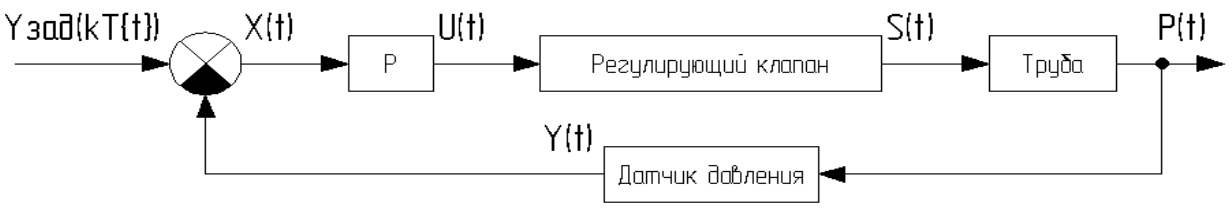

Figure 13 - ***Functional diagram of the control loop***

As a result of the comparison, an error X (t) is generated, which is fed to the logic part of the PID controller. At the output of the regulator, a control signal U (t) is generated, which determines the degree of valve opening.

A feature of the obtained scheme is the presence of negative feedback of the system output with its input, which serves to measure the result of the system's action, and the feedback is not single.

3.2. Description of elements by transfer functions

Block diagram of the control loop

Let us describe each element of the functional diagram with a transfer function. We will assume that the adders used in the circuit do not affect anything, that is, they have unit transfer functions.

- Pressure meter.

An intelligent gauge pressure sensor VEGABAR 52 is installed on the petrol supply line. The technical documentation for the sensor indicates that the sensor has the properties of an inertial link, with the response time of the sensor module Ts = 0.043 s. Additionally, the damping time Td = 1 s is set in the sensor, which is necessary to eliminate the influence of pulsations when fuel oil is supplied. The damping time is added to the sensor response time, i.e. total sensor response time:

$$T_{dd} = T_s + T_d = 0{,}043 + 1 = 1{,}043\ s. \quad (1)$$

The built-in processor unit of the sensor allows you to correct its own nonlinearity and the influence of external influencing factors.

The pressure sensor can be represented as a typical inertial link:

$$W_{\partial\partial}(p) = \frac{k_{\partial\partial}}{T_{\partial\partial} \cdot p + 1} \quad (2)$$

The coefficient kdd is determined based on the following conditions: the minimum fuel oil pressure P_{min} = 1 MPa (1 106 Pa) corresponds to the output signal of the sensor $Y_{\min}$ = 4 mA (0.004 A), and the maximum pressure $P_{\max}$ = 3 MPa (3 106 Pa) corresponds to the output signal sensor $Y_{\max}$ = 20 mA (0.02 A). Then:

$$k_{\partial\partial} = \frac{Y_{\max} - Y_{\min}}{P_{\max} - P_{\min}} = \frac{0{,}020 - 0{,}004}{(3-1)\cdot 10^6} = 8\cdot 10^{-9} \qquad (3)$$

- Pipe.

Taking into account the short pipe length between the control valve and the pressure sensor, we do not take into account the possible transport lag and pressure drop in the pipe. Based on this, we will consider the pipe as a typical amplifying link with a gain equal to unity:

$$W_m(p) = 1$$

• Control valve.

Note that all attachments are installed and tested at the factory for the parameters specified in the valve questionnaire, since determining the properties of the valve is a complex task that can be solved for a specific valve configuration. For the selected equipment and process parameters, in accordance with the characteristics given in, the valve can be considered as a typical oscillating link with time constants:

$$T_{1vl} = 0{,}28 \text{ s}; \; T_{2vl} = 0{,}45 \text{ s}.$$

Valve transfer function:

$$W_{vl}(p) = \frac{k_{vl}}{T_{1vl}^2 p^2 + T_{2vl} \cdot p + 1} \qquad (4)$$

The coefficient kkl is determined based on the following conditions: the minimum signal U_{min} = *4 mA* (0.004 A) at the positioner inlet corresponds to the medium pressure at the valve outlet S_{min} = *1 MPa* (1 106 Pa), and the maximum signal U_{max} = *20 mA* (0.02 A) corresponds to the pressure S_{max} = *3 MPa* (3 10-6 Pa). Then:

$$k_{vl} = \frac{S_{\max} - S_{\min}}{U_{\max} - U_{\min}} = \frac{(3-1)\cdot 10^{6}}{(20-4)\cdot 10^{-3}} = 1{,}25\cdot 10^{8} \qquad (5)$$

• PID controller.

The controller functions as a regulator. We will consider a simplified way of solving the control problem using the methods of linear systems, since the central processor of the controller has a high speed (we do not take into account the discreteness of control).

When adjusting, the PID controller requires 3 parameters to be set: the gain of the proportional channel, k_p, the gain of the integral channel, k_i, and the gain of the differential channel, k_d. Since the regulator includes a second-order forcing link, we write:

$$W_P(p) = k_n + \frac{k_u}{p} + k_o \cdot p = k_u \frac{T_{1P}^2 \cdot p^2 + T_{2P} \cdot p + 1}{p} \qquad (6)$$

where:

$$T_{1P}^2 = \frac{k_o}{k_u},\ T_{2P} = \frac{k_n}{k_u}.$$

It is not yet possible to write expression (6) in numerical form, since $T^2_{1\text{Р}}$ and $T_{2\text{Р}}$ are unknown parameters determined through the settings of the regulator.

Based on the functional diagram, we will draw up a block diagram of the pressure control loop (Figure 14).

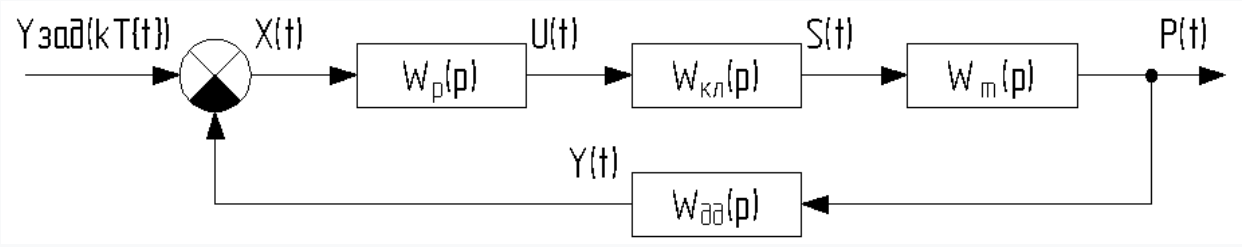

Figure 14 - ***Block diagram of the pressure control loop***

Let us write in the symbols of the links the concrete expressions of their transfer functions in numerical form (where possible). The final block diagram is shown in Figure 16.

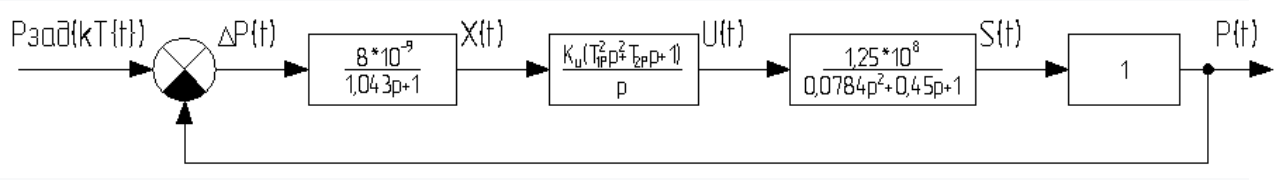

Figure 16 - ***Final block diagram***

3.3. System investigation in MATLAB system

The study of the system will be carried out in the MATLAB system, in the Simulink package for modeling dynamic systems, intended for solving problems of analysis and synthesis of automatic control systems. Simulink has ample opportunities for the implementation of methods of the theory of automatic control in the study of the dynamics of automatic systems. The system under study is specified in the form of a block diagram, recruited from the standard links available in the Simulink library. When using analysis methods, Simulink calculates the transfer function, frequency characteristics and transient process for a given structure, and gives the calculation results in the form of graphs.

To study the system, we enter the obtained block diagram (Figure 15) of the system into the model window, transforming it in accordance with the requirements of the program (Figure 17).

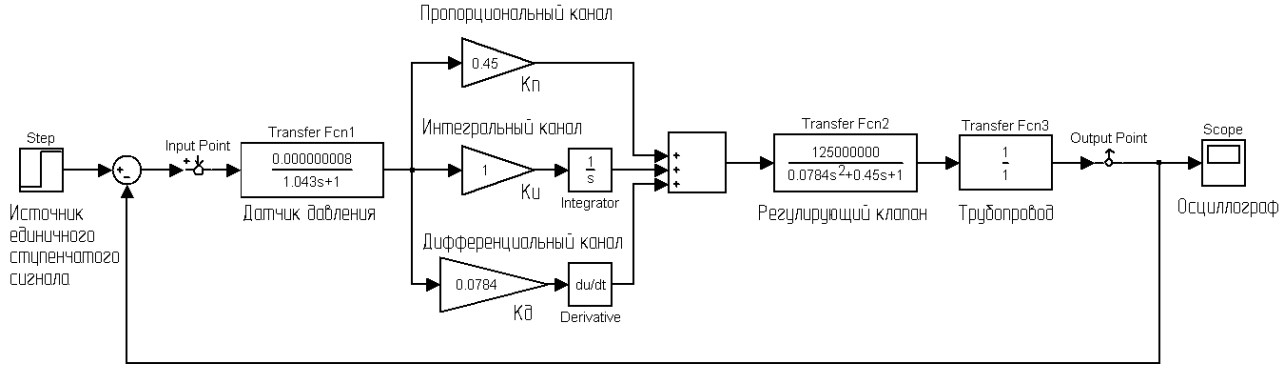

Figure 17 - ***Block diagram in MATLAB***

To eliminate the negative influence of the oscillatory characteristics of the valve on the quality of the system, it would be most rational to choose such parameters of the regulator that will be similar to the parameters of the engine, that is:

$$T_{1P}^2 = \frac{k_d}{k_i} = T_{1vl}^2 = 0{,}0784; \qquad (7)$$

$$T_{2P} = \frac{k_n}{k_i} = T_{2vl} = 0{,}45 \qquad (8)$$

With such settings, the expression in the brackets of the numerator of the transfer function of the regulator and the expression in the denominator of the transfer function of the valve are reduced, which compensates for the oscillatory properties of the valve.

At the first stage of the study, for definiteness, we take the gain of the integral channel of the controller equal to $K_i = 1$, then from (7) and (8):

$K_n = 0{,}45;$

$K_d = 0{,}0784.$

The transient graph for the initial PID controller settings is shown in Figure 18.

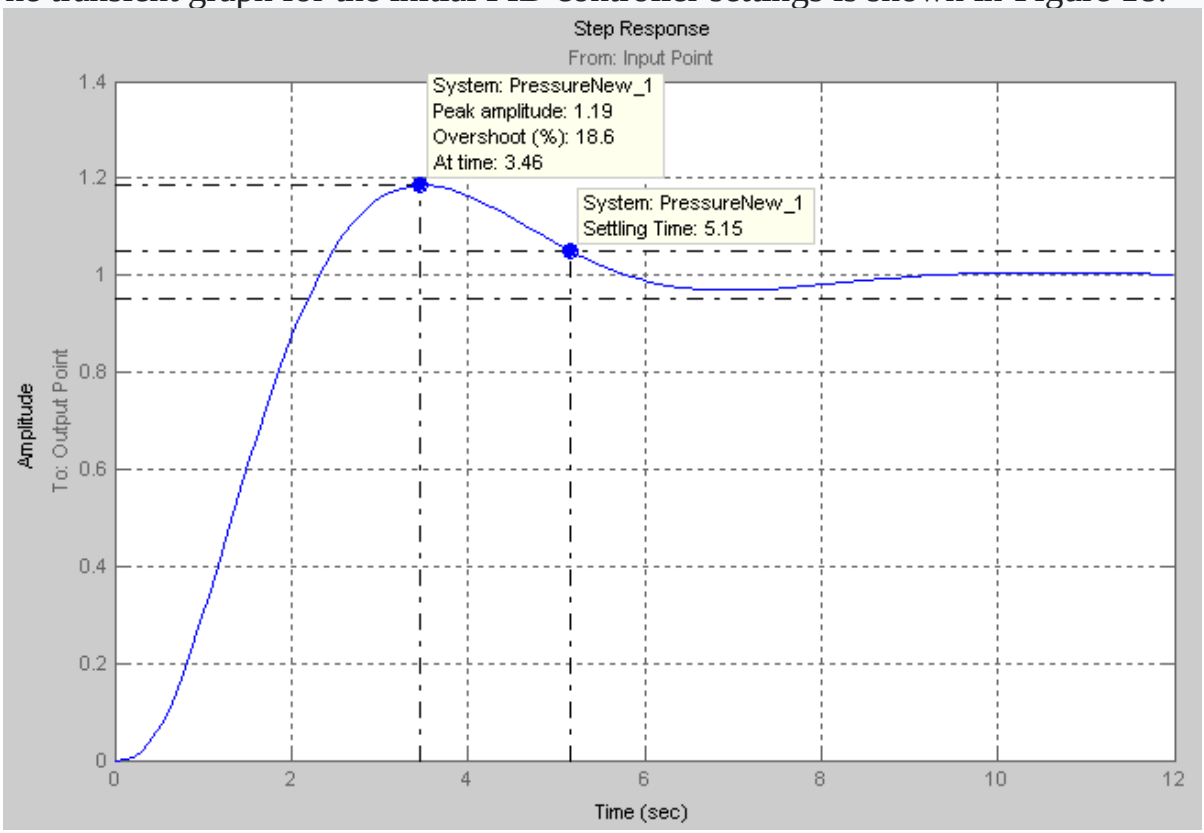

Fig. 18 - ***Graph of the transient process for the initial settings of the PID controller***

It can be seen that the system is stable with an oscillatory transient. The duration of the transient process t_{tp} = 5.15 s (the regulation time tpp is defined as the time elapsed from the beginning of the transient process to the moment when the value of the parameter at the output of the system is established, which differs by no more than 5% from the steady-state value). The overshoot is 18.6%, the static error is zero (integral component present).

Analyzing the results obtained, we conclude: although the resulting system is stable, the quality of the process is unsatisfactory. When using a PID controller, you can get better quality (provide an aperiodic transient process, or reduce overshoot to the recommended values - σ <15%) if you can select the appropriate controller settings.

We will look for the optimal controller settings using logarithmic frequency characteristics.

To build the LACH and LPhCP system, we set the entry / exit points in the model structure and break the feedback loop.

LFCH of the investigated model with the initial settings of the regulator are shown in Figure 19 - curves L1 (ω) and φ1 (ω) (PressureNew_1 on the Magnitude and Phase graphs).

Note:

and corresponds to the frequency of conjugation $\omega s = 1 / T_{dd} = 0.958$;

B, C, D - cutoff frequency at the appropriate settings of the regulator;

E, F, G - LPhCH values at the corresponding regulator settings.

Figure 19 shows that the general view of the LACH at the initial settings of the regulator is optimal, it remains to choose the gain of the system, using the rules: first, in the vicinity of the cutoff frequency within at least 0.6 decks in both directions, the slope

of the LACH should be -20 dB / dec — in this case the transient will be aperiodic; secondly, the phase stability margin of the system should lie in the range from 20° to 50°, or, in extreme cases, be higher than these values; thirdly, the amplitude stability margin of the system must be at least -15 dB.

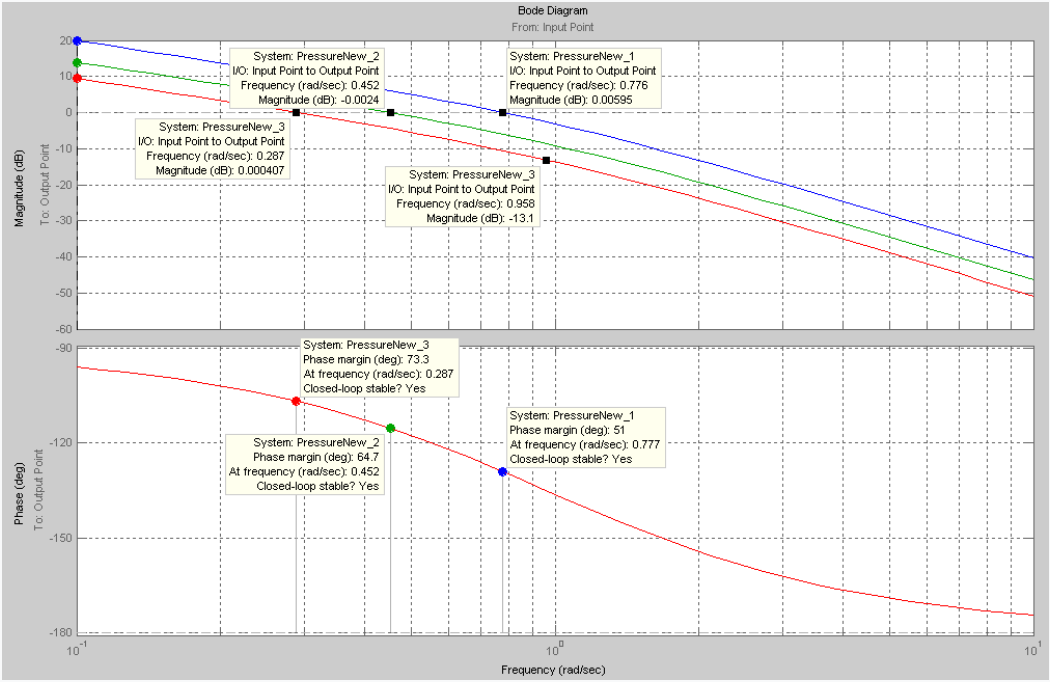

Fig. 19 - ***LFCH of the investigated model with the initial settings of the regulator***

Note that with a change in k_i and the curve $L_1(\omega)$ will move up or down parallel to itself, $\varphi_1(\omega)$ remains unchanged. By varying k and, it is possible from $L_1(\omega)$ to obtain such Lopt (ω), which will have the most optimal form, that is, correspond to a higher quality of the transient process.

For the initial settings of the PID controller, LFCH have the following characteristics: ωs <ωπ - the system is stable; ωc lies in the section with a slope of -20 dB / dec; phase stability margin φз = 51°; dB because φ1 (ω) does not cross the -180° straight line. It can be seen that the only condition that is not fulfilled is that in the vicinity of the cutoff frequency within at least 0.6 dec in both directions, the slope of the LACH should be -20 dB / dec. To fulfill this requirement, K_i must be reduced.

Take

K_i = 0.5 then:

K_p = 0.225; K_d = 0.0392.

LFCH with these settings of the regulator are shown in Figure 18 - curves L2 (ω) and φ2 (ω) (PressureNew_2 on the graphs Magnitude and Phase). It can be seen that for ωc the distance of 0.6 decks to the inflection point is still not provided.

Take K_i = 0.3, then:

K_p = 0.135; K_d = 0.02352.

LFCH for these settings are shown in Figure 18 by curves L_3 (ω) and φ_3 (ω) (PressureNew_3 on the Magnitude and Phase graphs). In this case, all the requirements are met to obtain the optimal, in terms of quality, transient process.

Transient processes for all accepted controller settings are shown in Figure 20.

The quality assessment of the tuned system is made according to the transient process schedule and according to the logarithmic characteristics (curves L_3 (ω) and φ_3 (ω) in Figure 20).

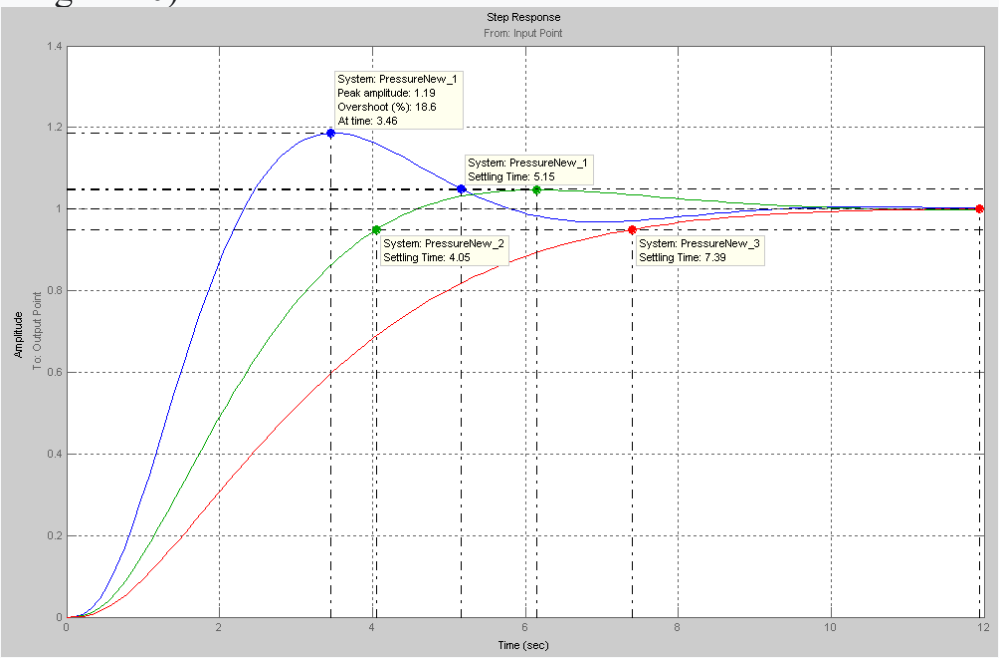

Fig. 20 - ***Transient processes for all accepted controller settings***

The regulation time tpp is found according to the transient process schedule (Figure 20, curve PressureNew_3): t_{nn} = *7,39 s*

Phase margin of the system: $\varphi_3 = 64{,}7°$

Amplitude stability margin: $L_3 \to -\infty$ dB.

IV. SOFTWARE AND MATHEMATICAL SOFTWARE

4.1. Development of control algorithms

The general control algorithm gives an idea of the sequence of actions being implemented; its feature is the presence of parallel processes. In the initial state, the programmable controller is off, the operator's workstation is on and runs under Windows XP. The following branches of parallel processes (taking into account the independence of turning on the PC and starting the software) describe the stages of system initialization. After turning on the PC, the subroutine of its initialization is executed and, in the event of a malfunction, a failure message is issued with the termination of the system initialization process. Upon successful initialization, the PC goes into standby mode, waiting for communication with the upper level. In case of successful completion of the test and establishing communication with the PC, a sign of the system readiness for operation is displayed on the AWS screen - the main screen of the operator interface with the main menu is displayed. After that, the system goes into the waiting mode for the operator's command. The system recognizes the entered command and, if it is successfully identified, issues a command to load the corresponding program, otherwise it displays a message to the operator and waits for the next command.

Let's take a closer look at the predefined automatic atmospheric distillation process. At the beginning of work, the temperature sensor at the top of the distillation column is interrogated, if the temperature is equal to the set value, then the system polls the next sensor, but if there are deviations from the set temperature, PID control takes place and the required effect is issued, after which the column level sensor is interrogated. If the value meets the specified parameters, the transition to the next sensor, if the level reaches

the maximum or minimum value, a pre-alarm notification, alarm and pump stop occurs. In the normal course of the process, the temperature sensors at the outlet of the CVC are interrogated, if the temperature does not correspond to the set values, PID control is carried out and the output action is output to the motors. Next, the pressure sensor in the tank is interrogated, if the parameters do not correspond to the settings, the shut-off and control valves are affected, when the maximum or minimum value is reached, a pre-alarm signal is triggered. Next, the level sensors and the level difference in the tank are interrogated, if there are deviations from the set level, PID control is carried out and the output action is issued to the corresponding valves and motor motors. At the minimum permissible level in the tank, a pre-alarm is triggered and the pumps are stopped. In the normal course of the process, the program carries out the next polling of the sensors in the same way.

The algorithm diagram shows the pumping unit control program with interrogation of the main sensors. Let's consider this algorithm in more detail. At the beginning of the program, the pressure sensor at the pump outlet is interrogated, if the value meets the required parameters, the next sensor is interrogated, otherwise an alarm is issued. Next, the level sensor in the barrier liquid tank is interrogated, if the value satisfies the specified one, the transition to the interrogation of the next sensor, if not, then the alarm is issued locally and to the operator room and the pump stops at a critical minimum value. Next, the pump bearing temperature sensor is polled. When the maximum value is reached, an alarm is issued and the pump stops. In the normal course of the process, the program carries out the next polling of the sensors according to the same scheme.

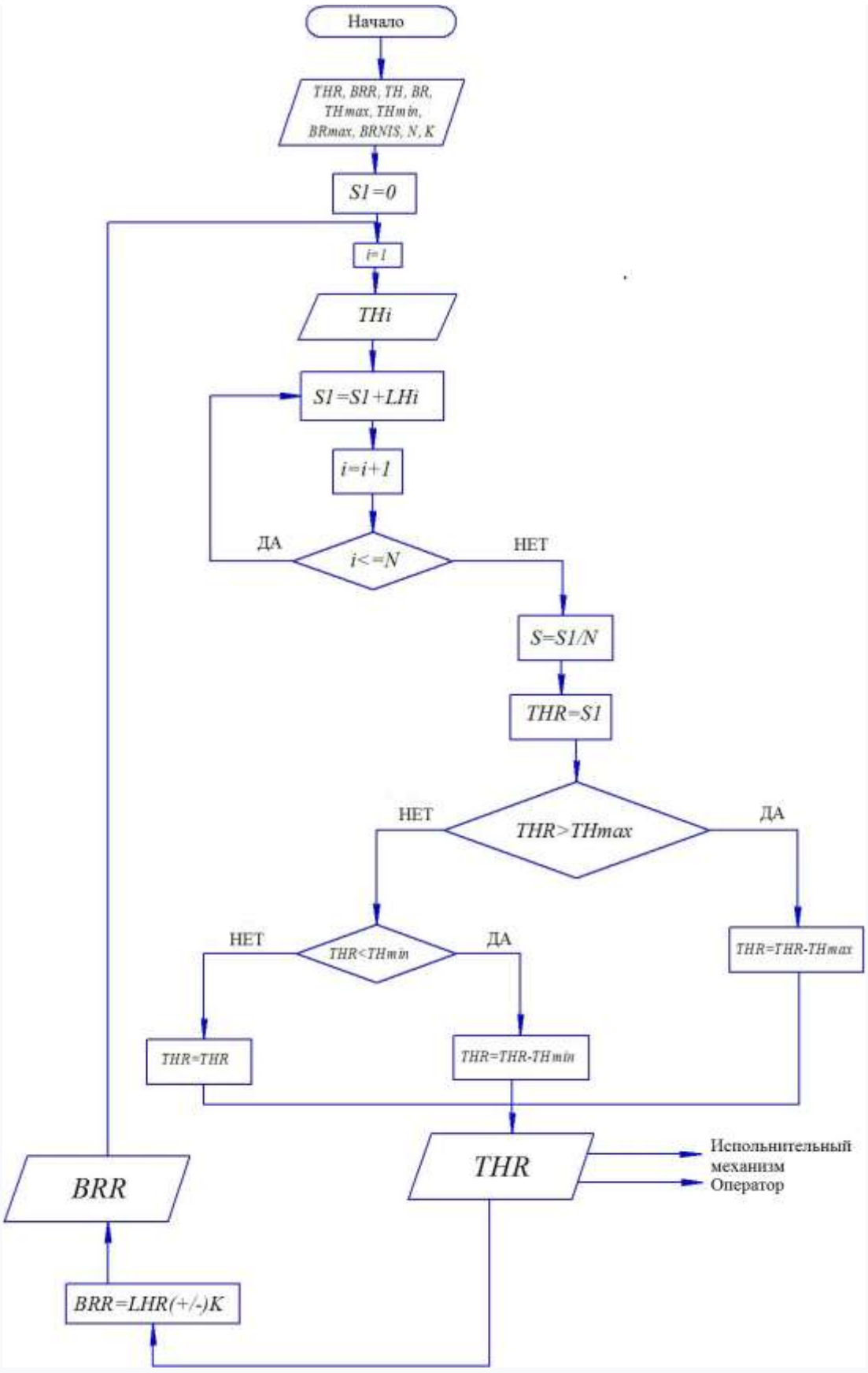

Control algorithm

4.2. Software. Project structure.

SIMATIC standard software for creating programs for use in programmable logic controllers in Ladder Diagram, Function Diagram or Statement List for SIMATIC S7-300 stations.

The software performs the following functions:

• collection of information on heat engineering parameters and condition of technological equipment;

• processing of information coming from sensors of technological parameters, position and state of actuator drives (EM);

• EM control in automatic mode, ensuring the performance of technological operations in accordance with the control algorithm;

• automatic control of basic parameters;

• remote control of EM from the operator's panel;

• displaying the current values of heat engineering parameters, information about the operating modes and the state of the system;

• emergency protection, shutdown, blocking in the event of an emergency;

• emergency warning signaling (light and sound).

The STEP 7 Lite software package is used to configure and program SIMATIC logic controllers of the S7-300 and C7 families, as well as ET 200M and ET 200S stations (stand-alone). In STEP 7 Lite, the creation of an automation solution takes place in several stages. The figure below shows the steps you need to follow in most projects.

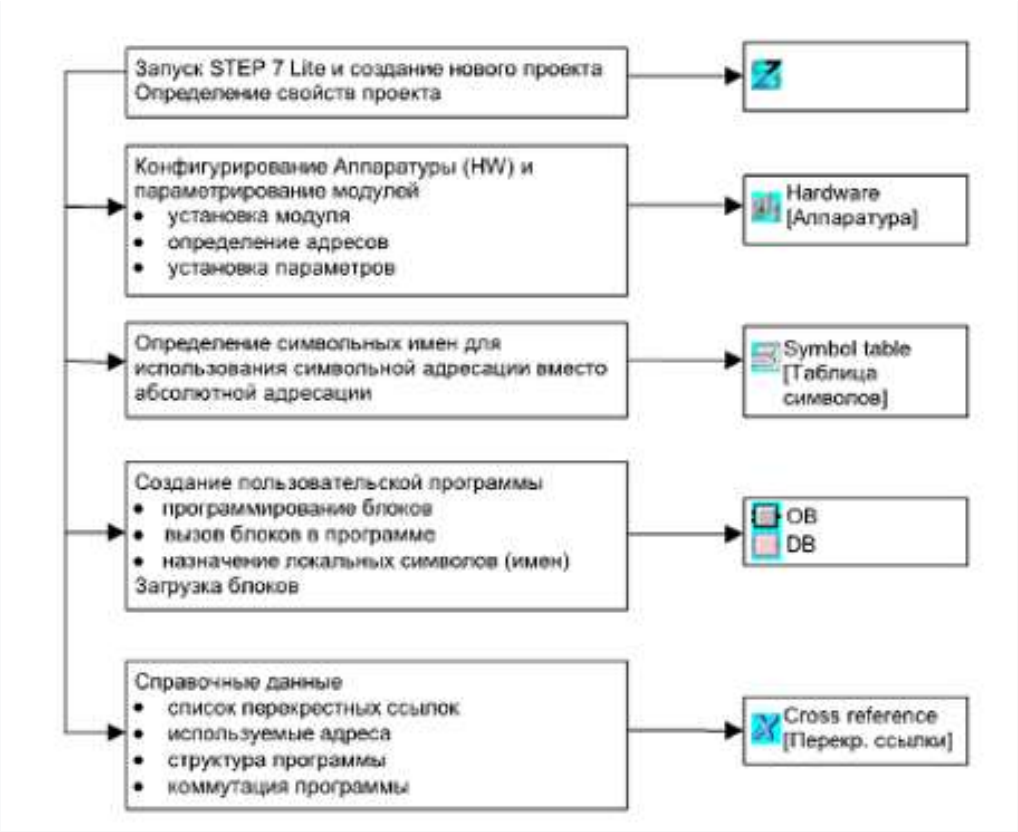

Fig. 21 - ***Project structure***

The first step is to configure the hardware (Figure 21).

The programmable controller configuration workspace consists of the following areas:

• Graphic representation, in which baskets with modules are shown as they look in reality.

• A table representing a separate basket and containing additional information about the modules (order number, addresses).

• "Hardware Catalog", from which you can select the required hardware components.

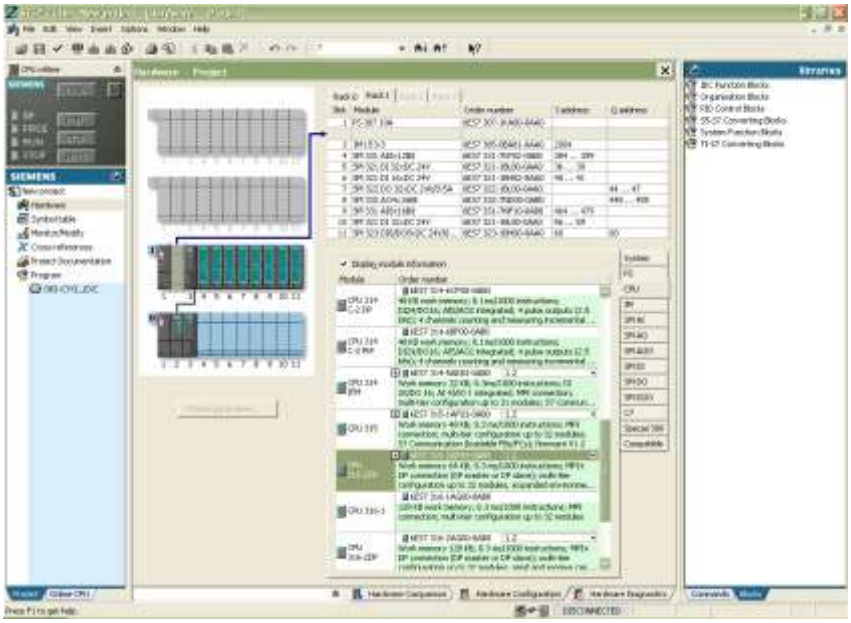

Figure 22 - ***Hardware configuration***

In STEP 7 Lite, you have to work with the addresses of I / O signals, memory bits, counters, timers, data blocks, and function blocks. You can refer to these addresses using the absolute value of the address. However, the program will be much easier to read if the address symbols are used. To do this, you need to create a symbol table (Figure 23).

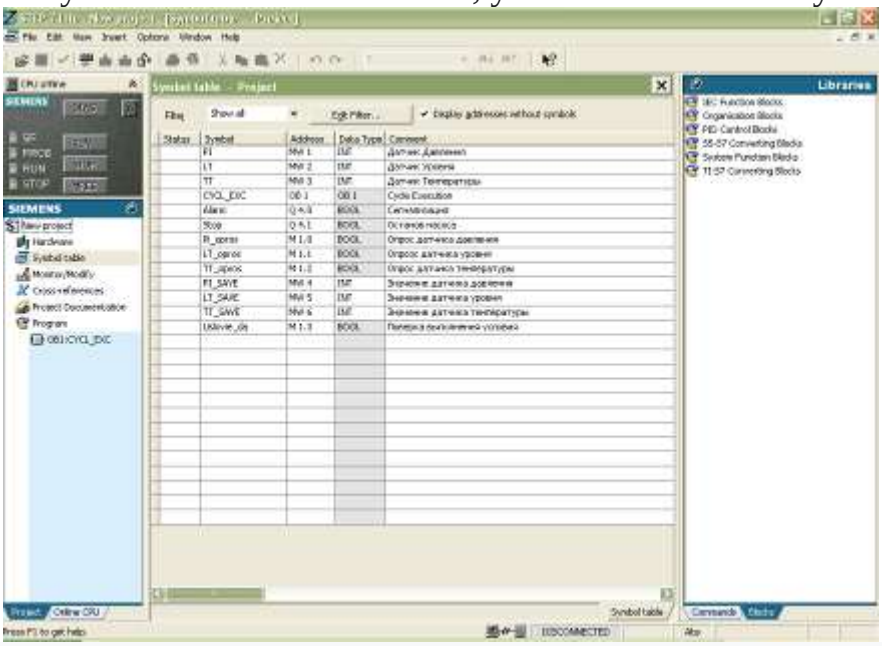

Fig. 23 - ***Symbol table***

The third step is to create a control program. To do this, you must select a programming language.

Programming languages:

The SIMATIC programming languages used in STEP 7 Lite comply with DIN EN 6.1131-3.

• LAD (Ladder Logic) is a graphical programming language. The command syntax is similar to that of a circuit diagram. LAD allows the signal to be monitored as it passes through various contacts, components and output coils.

• STL (Statement List) is a text-based, machine-oriented programming language. If the program is written in STL, then the individual instructions, in most cases, correspond to the steps that the DC executes when processing the program. To make programming easier, the STL includes some high-level programming language constructs (such as structured data access and block parameters).

• FBD (Function Block Diagram) is a graphical programming language that uses Boolean algebra to represent logic. In addition, it is possible to use complex functions (such as math functions) in conjunction with logic blocks.

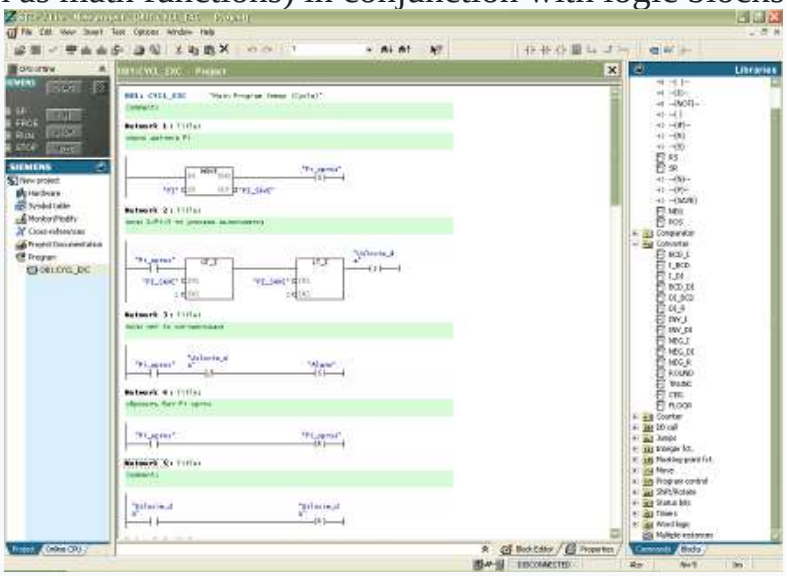

Fic. 24 - ***Control program in LAD language***

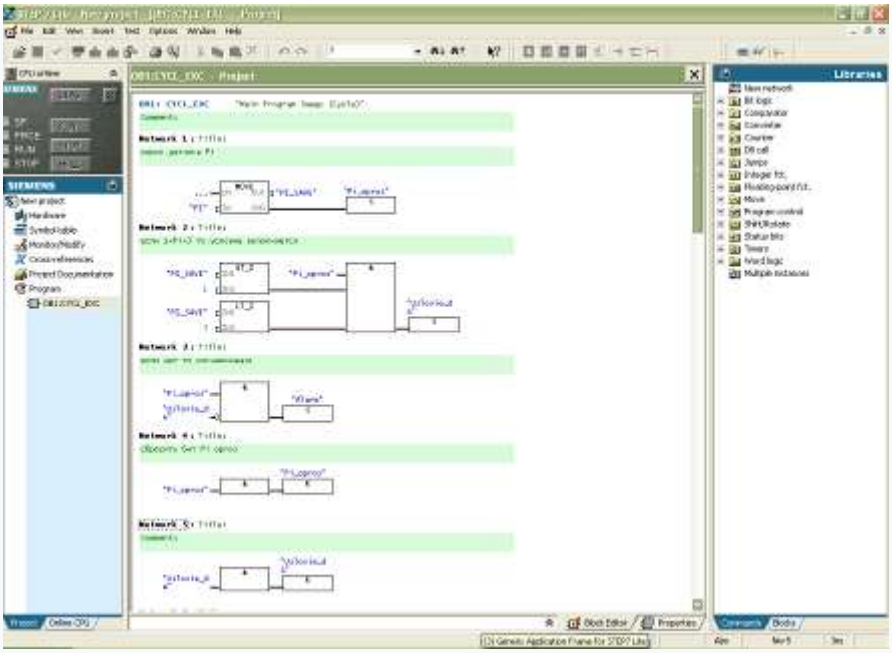

Fic. 25 - ***Control program in FBD language***

Cyclic program processing is the standard PLC mode. The operating system calls OB1 periodically, and this call starts the cyclical execution of the user program. To ensure that a consistent image of the process signals is found in the DC during cyclic program processing, the DC does not directly access the address areas of the inputs (I) and outputs (Q) of the I / O modules, but the internal memory area of the DC, which contains the mapping of the process inputs and outputs.

In the dissertation work, a part of the control program for controlling pumping units was developed. The program corresponds to the control algorithm, the source code of the program in the LAD language is shown in Figure 26.

OB1: CYCL_EXC "Main Program Sweep (Cycle)"

Comment:

Network 1 : Title:

опрос датчика Pi



Network 2 : Title:

если 1<Pi<3 то условие выполняется



Network 3 : Title:

если нет то сигнализация



Network 4 : Title:

сбросить бит Pi opros



Network 5 : Title:

Comment:



Network 6 : Title:

опрос датчика LT



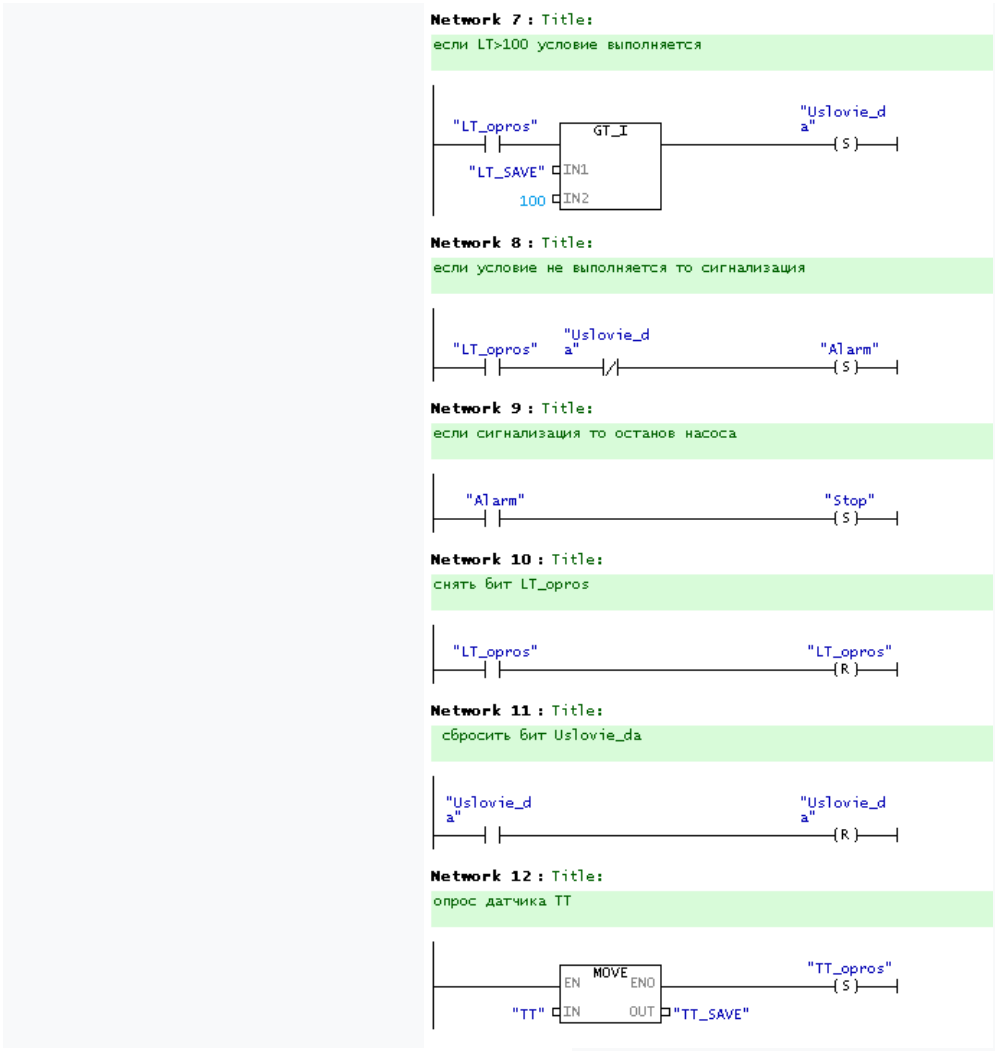

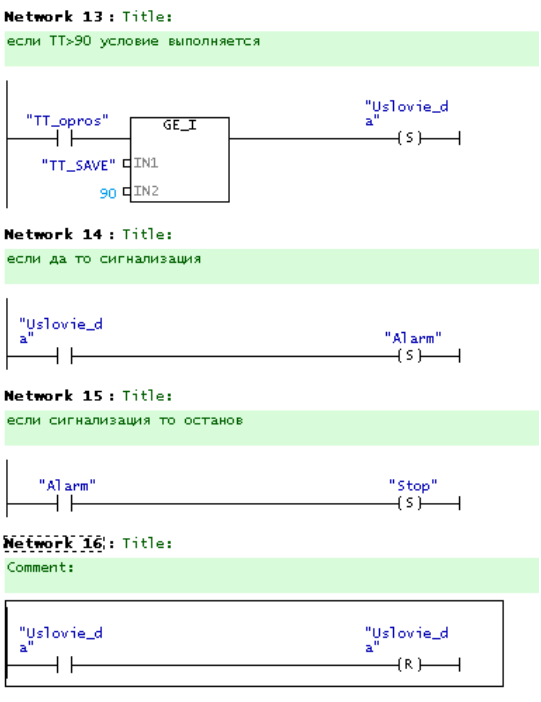

Fig. 26 - ***control program in LAD language***

4.3. Review of existing SCADA systems.

At present, software packages for visualization of measurement information on operator display consoles, called operator consoles configurators, or SCADA programs, have become widespread in the creation of software and technical complexes. SCADA stands for Supervisory Control And Data Acquisition. Recently, these systems have a more accurate name: MMI / SCADA, where MMI (Man Machine Interface) determines the presence of a man-machine interface. These packages allow you to create complete high-quality software for operator consoles, implemented on various types of personal computers and workstations of computer networks.

The main functions of SCADA programs in terms of developing a display console (SCADA instrumental complex) and in terms of operating the console in real time (SCADA executive complex) are as follows:

• collection of current information from controllers or other devices and devices connected directly or through a network with the operator's console (including those based on standard DDE, OPC protocols);

• primary (computational and logical) processing of measuring information;

• archiving and storage of current information and its further necessary processing;

• presentation of current and historical information on the display (implementation of animated mnemonic diagrams, histograms, animation images, tables, graphs, trends);

• allocation of emergency and pre-emergency situations with automatic generation of alarm signals;

• input and transmission of operator commands and messages to controllers and other system devices;

• registration of all operator actions (manual start of the process, emergency stop, change of the system setting parameters);

• registration of all errors and events within the control system (hardware alarms, network errors);

• protection against unauthorized access and granting various rights to users while working with the system;

• printing reports and protocols of arbitrary form at specified times, presentation and recording of emergency situations at the time of their occurrence;

• solution of user application programs and their relationship with current measured information and management decisions;

• informational connections with servers and other workstations through different network structures.

SCADA - Genesis32 system

OPC interface support is provided for connecting equipment. Most manufacturers offer OPC servers for their controllers. There are no built-in drivers. To connect your own devices, an OPC server constructor is offered - software that facilitates the creation of an OPC server.

There are no special real-time tools. The throughput of an OPC server is highly dependent on the system configuration and can range from 1000 to 60,000 elements per second. The package contains a component for controlling technological processes from the operator's computer.

ControlWorx supports all IEC1131 languages

The system consists of the following main modules:

GraphWorX32 is a visualization tool for controlled technological parameters and operational dispatch control at the upper level of the process control system.

TrendWorX32 is a tool for accumulating and presenting current data in the form of graphical time dependences.

AlarmWorX32 is a set of software components for detecting emergency events, alerting operating personnel, receiving acknowledgments of the perception of information about emergency events and registering information about emergencies in the database.

DataWorX32 is an OPC server designed to organize a single bridge between multiple client and server components of the system.

Only the number of I / O points (read simultaneously from the OPC server at a given time) is limited. Limited by license. There are license options for 75, 150, 300, 500, 1500 points and a license without restrictions. All other restrictions depend on the performance of the computer.

Wonderware InTouch

Wonderware's InTouch software suite is designed to develop industrial plant automation systems that span all levels of production, from process control to manufacturing control.

Today InTouch is one of the most widely recognized MMI-class software packages for industrial automation, with a total number of installations worldwide exceeding 30 thousand. The package was developed as a tool for the world's most widespread hardware and software platform - a PC-compatible computer with the DOS / WINDOWS operating environment. However, today Wonderware, closely monitoring the trends in the market for PC-compatible personal computers and software for them, offers the next generation of the package - InTouch for WINDOWS 95 and InTouch for WINDOWS / NT. Thus, it is hoped that developers who create industrial automation systems based on InTouch and the most widespread and cheapest hardware and software platform will always have the most modern basic tools at their disposal.

Touch Pushbutton Action Scripts are very similar to keyboard scripts and bind to objects that will be used as action buttons. These scripts are run each time the button object is clicked.

Condition Scripts (scripts for changing a boolean expression) are associated with a boolean variable or expression, which will take on the values of either "true" or "false". Logic scripts can also contain analog variables.

Data Change Scripts are associated with either a variable or a variable field. These scripts are executed only once, when the value of a variable or field changes by an amount exceeding the tolerance value specified in the variable dictionary.

ActiveX Event (scripts of events ActiveX) are designed to support the mechanism of reaction to events in ActiveX - objects. Each event can have one associated ActiveX Event script that runs in WindowViewer at runtime.

Quick Function - scripts that can be called from other scripts and used in expressions when defining dynamic properties of objects.

SCADA - Trace Mode 5 system

1426 devices are supported via OPC, DDE, HART, ProfiBus, ModBus and others.

Ability to work in real time

Real-time monitor (RTM) is a powerful real-time server - the main element of the distributed ACS TRACE MODE. Designed for collecting data from USO through built-in and custom drivers, OPC and DDE clients, mathematical processing, implementation of direct digital and supervisory control, generation of alarms, reporting of alarms, visualization of the technical process on mnemonic diagrams, network exchange with other project nodes, support of exchange with client modules TRACE MODE via DCOM, data exchange with independent applications via OPC and DDE servers, as well as for information exchange with external databases.

The minimum response time of the real-time monitor is 0.001 s. TRACE MODE architecture provides the highest real-time performance.

The RTM is capable of receiving data through 32 serial ports. On its basis, it is possible to create systems operating in hot standby mode. For RTM there are drivers for

more than 300 controllers and USOs most used in the process control systems of Russia. Drivers for the most popular controllers are built into the RTM.

In terms of the number of supported protocols of controllers and USOs that are actually used in the process control systems in Russia and the CIS, TRACE MODE is significantly ahead of other SCADA systems.

RTM has a modular structure for 128/1024 / 32000x16 / 64000x16 channels, tags are unlimited.

The developer system includes the following components:

1. Channel Database Editor (CDE) - a tool for developing a distributed real-time database. RBC creates project nodes - operator stations and controllers, configures I / O boards and controllers (DLL, DDE, OPC), sets technological boundaries and alarms, performs visual programming of control algorithms in Techno FBD and Techno IL languages (IEC 1131- 3), redundancy functions are programmed, network exchange is configured, communication with databases and applications, a data archiving system is created. RBC automatically generates reporting documentation for the process control system project. The technologies of auto-building of the project are supported.

2. Data presentation editor (DPE) - a tool for developing screen forms of the operator interface. In the RPD for each node of the project, graphic screens are created, static mnemonic diagrams of the process are formed, and their dynamization is carried out by means of vector and AVI animation. Virtual controls, real-time and historical trends are created, and alarm reports are generated. Embedding of ActiveX - components is carried out.

3. Template editor (TE) - a tool for the development of templates and scenarios for the formation of documentation on the course of the technological process. In TE, you can create a static basis for a reporting document, set links to channels and trends in real-

time servers, write scripts for the automatic generation of reporting documentation about a project.

4.4. Analysis and selection of the operator interface development environment

Description of the graphical operator interface

This chapter has covered the most popular GUI development environments for the operator. They all have similar functions and characteristics. They differ primarily in price and supported equipment. Because of this, I chose the Wonderware InTouch system.

The main differences between the InTouch package compared to other software products:

- Reliability and stability in operation - 9 years of development and operation of more than 150,000 installed systems at industrial facilities.

- Ease of use and unlimited possibilities for the developer (any number of mnemonic diagrams, unlimited complexity of algorithms.).

- Using standard communication protocols (DDE, OPC, TCP / IP, etc.).

- High operating speed due to a mechanism that dynamically adjusts the polling rate of input signals (polling occurs only when the value of the monitored parameter is changed).

- Client-server architecture for efficient networking. The database is maintained only on the server; there is no need to copy it to client stations.

- Openness - you can add and use off-the-shelf components of other companies due to the support of ActiveX and OPC technologies.

- Integration with other Wonderware software packages and easy data exchange with popular Windows software packages - Microsoft Excel, Microsoft Access, Microsoft Visual Basic, etc.

- The largest number of ready-made I / O servers - over 600.

- Ability to create libraries of algorithms.

- True multitasking mode of operation (multithreaded execution of custom algorithms).

- Ability to work with over 120,000 signals and parameters.

- Automatic quality control of signals coming from sensors and controllers.

- Working as a Windows NT service - the program's functioning is not disturbed by the process of user registration in the operating system.

- A distributed alarm tracking and logging system supports multiple alarm servers ("providers") simultaneously, allowing operators to see alarm information in multiple remote locations synchronously.

Description of the operator's graphical interface.

The main screen gives the operator an overview of the status and progress of the atmospheric distillation process. The main screen shows:

- main technological equipment: topping column, steam tank, heat exchanger, air condensers, refrigerators;

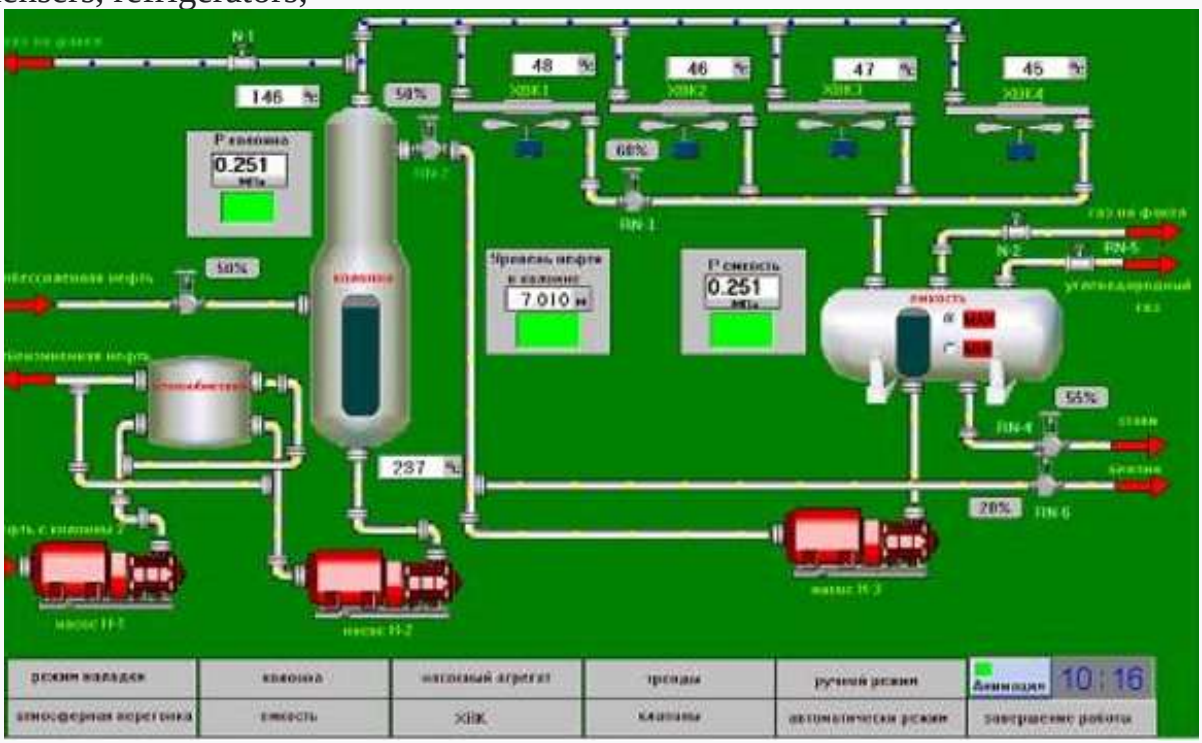

- actuators involved in atmospheric distillation: feed pumps, main control valves and gate valves;

- pipelines connecting technological equipment and actuators;

- the main monitored and adjustable parameters of the technical process: temperature of the liquid in the course of the technical process; supply of cooling sharp reflux to the column, gas release when pressure is exceeded; levels in the column, containers, etc .;

- indication of the state of executive mechanisms: for pumps - inscriptions "on", "off"; for control and shut-off valves - valve opening as a percentage.

Note that each control object presented on the screen can be called to the control panel to obtain more detailed information, for example, the values of the regulated and alarm limits of the parameter, the blocking state, the setting value. To do this, the operator just needs to click on the button located next to the object of interest, or directly on the object itself.

The operator's interaction with the display system is organized using a mouse and a functional keyboard.

Since it is impossible to show all the parameters characterizing the course of the technical process, all equipment and actuators on one screen, reflect all the nuances (the visibility of the display of the technical process will be lost) - along with the general one, more detailed screens reflecting some part of the technical process are also used. The transition from the general screen to the private ones is carried out through the screen selection menu located on the right side (valid for any screen). There are 5 private screens in total:

- screen "KVK": reveals the process of cooling the gas-product mixture in the air condenser of the refrigerator - the input and output temperatures are displayed (Figure 27);



Fig. 27 - ***Screen "HVK"***

- “Tank” screen: shows the process taking place from the steam tank; all parameters characterizing the operation are displayed with the ability to view the values set for warning and limit levels. Figure 28 shows the tank pressure sensor window;

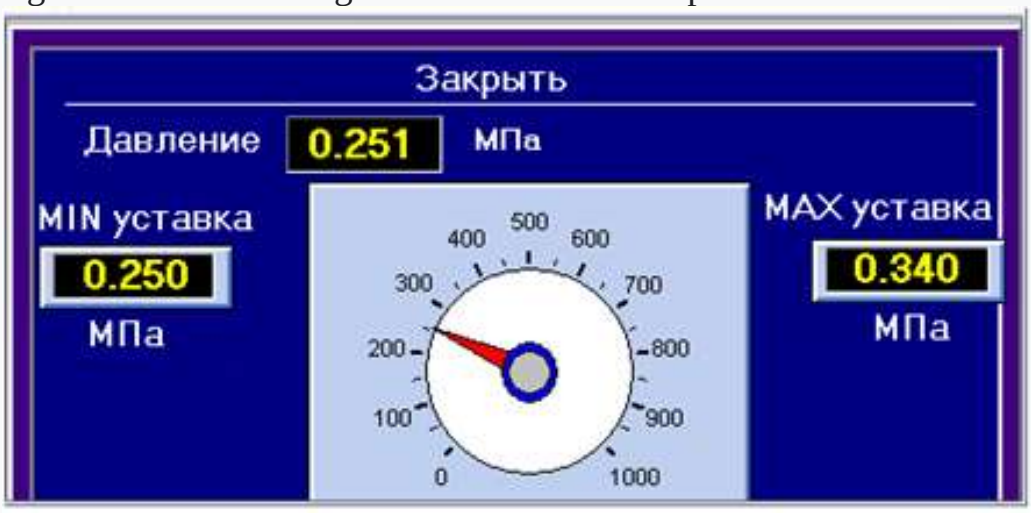

Fig. 28 - ***Tank pressure values***



Fig. 29 - ***Information about the level in the column***

- "Pumping unit" screen: gives complete information about the status of the pumps used, you can call the control panels for each pump to obtain detailed information (Figure 30);

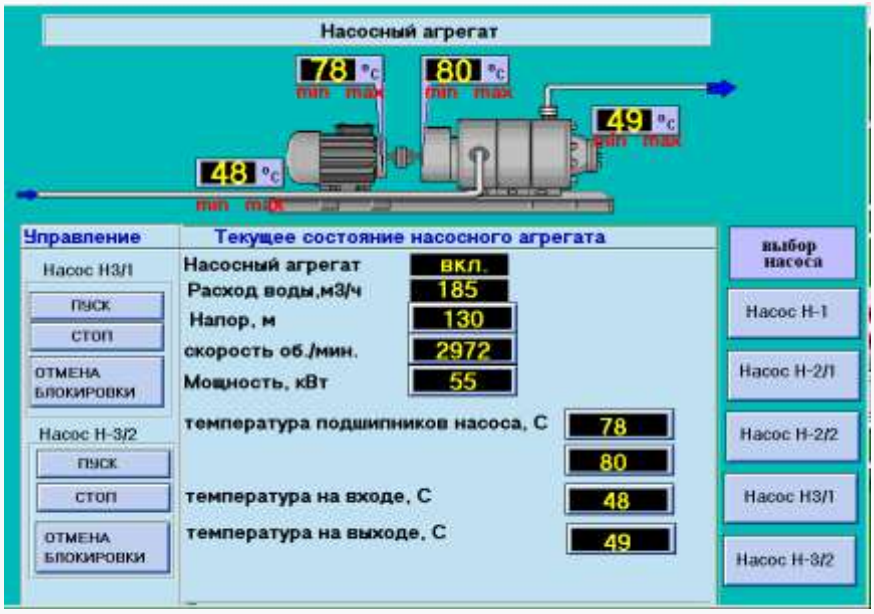

Fig. 30 - ***screen "Pumping unit"***

- "Valves" screens: provide a summary of all valves used in the system - valve states are displayed with the ability to call the control panel for each valve for more detailed information.

By clicking on the sensor, you can also get more detailed information, the setting value, the minimum and maximum values, the current value.

The mode and selection menu located at the bottom provides a summary of the current operating mode of the unit. In this menu, only one element is active, corresponding to the current mode of operation of the unit, the rest are locked in order to prevent receiving inaccurate information. When you click on the active mode button, a panel is displayed that provides a detailed overview of the operating mode (operating mode, input parameters, a summary of the process steps and running commands, information about users, etc.), the ability to exit to the general installation screen, and a number of other options.

CONCLUSIONS

During the preparation of the monograph, an automated control system for the atmospheric distillation of oil was developed, which made it possible to draw the following conclusions:

1. The basic principles and assumptions underlying the system analysis of multistage processes of primary oil distillation are considered.

2. A method has been developed for the system analysis of the multistage process of primary oil refining as a complex technical object of control and optimization, which allows, based on the construction of system integral estimates of the relative efficiency of local control loops, to identify ineffectively controlled technological parameters and optimize the corresponding multi-connected control systems.

3. To assess the comparative efficiency of local ATSs, a diagrammatic method of multi-criteria assessment was applied, which made it possible to establish formalized (quantitative) relative assessments of the compliance of existing ATSs with current regulatory documents and requirements, selected system criteria for technological efficiency, industrial and environmental safety, resource conservation and energy efficiency.

4. The quantitative estimates obtained as a result of the system analysis make it possible to develop recommendations for increasing the level of automation and efficiency of technological management; optimization of the structure and parameters of multi-connected technological process control systems according to system criteria in order to increase the efficiency of the production process while minimizing the cost of material resources and energy.

5. The developed methods were tested in solving the problem of system analysis of the primary oil refining process at the AVT unit. At the same time, the OVEN TRM-138 controller was used.

6. The temperature control loop at the top of the topping column was adjusted, with the following results: the type of the transient process - aperiodic; transient time 7.39 s; phase stability margin of 64.7 °. For such a process, the value of overshoot is zero. For the resulting system, we have an excess of these values, which means only underutilization of the properties of the system. Thus, we believe that the system meets all the requirements for stability and performance.

7. The introduction of an automated control system for the process of atmospheric distillation of oil made it possible to:

• expand the functions of automated control and management;

• to improve the reliability of the emergency protection system;

• improve the quality of technological process control;

• reduce the number and time of localization of emergencies and equipment failures.

8. A new methodology for assessing the level of automation and efficiency of control of the primary oil refining process has been studied, which regulates the algorithms for obtaining, sorting, processing and analyzing information in accordance with the formulated requirements for the form of presentation of initial data and analysis results.

LIST OF USED LITERATURE

1. Yusupbekov N.R., Muhamedov B.I., G'ulomov Sh.M. Texnologik jarayonlarni nazorat qilish va avtomatlashtirish. Toshkent.: "O`qituvchi", 2011.-576 b.

2. Алексеев В.М. Тихомиров В.М., Фомин С.В. Оптимальное управление. М.: Наука, 1979.

3. Анализ и синтез химико-технологических систем: [Учеб.] / В.В. Кафаров, В.П. Мешалкин - М.: Химия, 1991. - 432 с.: ил. - ISBN 5-7245-0366 (в пер.).

4. Антонов А.В. Системный анализ. М.: Высшая школа, 2004. - 454 с. ISBN: 5-06-004862-4.

5. Ахметов С.А. Технология глубокой переработки нефти и газа: Учебное пособие для вузов. Уфа: Гилем, 2002. 672 с.

6. Афиногентов А.А., Плешивцева Ю.Э., Сетин С.П., Снопков А.С. Структурнопараметрический синтез многоконтурной системы автоматического управления технологическим процессом первичной переработки нефти // Вестник Самарского государственного технического университета. Сер. Технические науки. 2013. 40, №4. С. 169-180.

7. Афиногентов А.А., Плешивцева Ю.Э., Сетин С.П., Тычинина Ю.А. Структурно параметрический синтез многоконтурной системы автоматического регулирования процесса первичной переработки нефти с объектом регулирования с транспортным запаздыванием // Вестник Самарского государственного технического ун -та. Сер. Технические науки. 2014. 44, №4. С. 160-169.

8. Волин Ю.М., Островский Г.М. Оптимизация технологических процессов в условиях частичной неопределенности исходной информации // Автоматика и телемеханика. 1995. №12.

9. ГОСТ 24.104-85 ЕСС АСУ. Автоматизированные системы управления. Общие требования.

10. ГОСТ 34.201-89 ИТ. Виды, комплектность и обозначение документов при создании автоматизированных систем.

11. ГОСТ 34.601-90 ЕСС АСУ. Автоматизированные системы. Стадии создания.

12. ГОСТ 34.602-89 ИТ. Комплекс стандартов на автоматизированные системы. Техническое задание на создание автоматизированной системы.

13. Диагностика и надежность автоматизированных систем [Текст]: учеб. / Б.М.Бржозовский, А.А.Игнатьев, В.В.Мартынов, А.Г.Схиртладзе. - Старый Оскол: ТНТ, 2006. - 379 с.: схем., граф.,табл. - ISBN 5-94178-116-4 (в пер.).

14. Дозорцев В.М., Кнеллер Д.В. АРС – усовершенствованное управление технологическими процессами // Датчики и системы. – 2005. - №10. – С. 56-62.

15. Дорф Р., Бишоп Р. Современные системы управления, пер. с англ. Б.И. Копылова, М.: Лаборатория Базовых Знаний, 2002.

16. Егоров А.А., Сетин С.П., Шендрик С.Н. Разработка алгоритма обследования автоматизированных систем управления технологическим процессом переработки нефти на установках АВТ// Труды VIII Международного форума по проблемам науки, техники и образования, г. Москва. – Т.1 – 2013. – С.124-125.

17. Захаркин М.А., Кнеллер Д.В. Применение методов и средств усовершенствованного управления технологическими процессами (APC)// Датчики и Системы. - 2010. - №10. - С. 57-71.

18. Иванов В.А., Медведев В.С., Чемоданов Б.К., Ющенко А.С. Математические основы теории автоматического управления. Том 1//Изд-во: МГТУ имени Н.Э. Баумана, 2006 в 3-х томах.

19. Ицкович Э.Л. Интеллектуальность средств и систем автоматизации// Автоматизация в промышленности. № 6.

20. Ицкович Э.Л. Методы рациональной автоматизации производства. М.: Инфра -Инженерия, 2009.

21. Ицкович Э.Л. Современные беспроводные сети связи в системах автоматизации на промышленных предприятиях//Датчики и системы. 2008. № 6.

22. Казиев В.М. Введение в анализ, синтез и моделирование систем. Изд -во ИУИТ, 2007. – 248 с.

23. Комплексный аудит качества управления процессом разделения нефти на установках АВТ. Разработка рекомендаций по типовым проектным решениям локальных систем регулирования технологического режима установок АВТ// ОАО «СвНИИНП», Отчет НИР, 2010.

24. Кривоножко В.Е., Пропой А.И., Сеньков Р.В., Родченков И.В., Анохин П.М. Анализ эффективности функционирования сложных систем. Автоматизация проектирования. 1999. №1.

25. Мановян А.К. Технология первичной переработки нефти и природного газа: Учебное пособие для вузов. 2-е изд. – М.: Химия, 2001. - 568 с.

26. Плешивцева Ю.Э., Деревянов М.Ю., Сетин С.П. Системный анализ качества управления процессом первичной переработки нефти. Журнал «Нефтяное хозяйство». 2014. № 8.

27. Расклад сил на мировом рынке нефти, 2016. – URL: http://www.mirnefti.ru/index.php?id=3

28. Бутковский А.Г. Методы управления системами с распределенными параметрами. М.: Наука, 1975.

29. Интернет сайты

www.siemens.com / page of products company Siemens

http://www2.emersonprocess.com/ page of products company Metran

www.arduino.com / page of Arduino

www.ziyonet.uz ta’lim portal

www.znakka4estva.ru

www.wikipedia.org

N.G. Kuliyeva, R.R. Ibragimov,
F.S. Qo'ldosheva.

RESEARCH OF PROCESS CONTROL METHODS USING MICROCONTROLLERS

(on the example of oil refining)

monograph

P.H. "B.B.C".

Editors:	**X.Dustov**
	A.Haitov
Tech.editor:	**G'.Qo'ziyev**
Correctors:	**Sh.Didarkuliyeva**
	G.Xamrayeva
Publisher:	**U.Sayitova**
Director:	**E.Rasulov**

Permission granted: 02 february 2023. Paper size 60x84 1/16.
Published in garniture Times New Roman.
Size 6,25 p.p. Printed 50 copies. Order No. 197.

License: 184087 X 25258

Published in the printing house of "West Media Express" LLC.
Address: 15A Qayum Murtazoyev street, Bukhara.
Phone: +998 95 420 39 00